DOCUMENT STATUS	
FOR INFORMATION	☐
COMMENTED	☐
APPROVED WITH COMMENTS	☐
APPROVED FOR DESIGN/CONSTRUCTION	☐
REJECTED	☐

EMERSON™

GENERAL AND INTERNAL ARRANGEMENT DRAWING

NETWORK CABINET

DCS SERANG PROJECT

REV.	DESCRIPTION	DATE	DRAWN BY	CHECKED BY	APPROVED BY
0	AS BUILT	29/08/19	AS/NAM	LKL	MNI
C	ISSUE FOR COMMENT	14/11/18	AS	LKL	MNI
B	ISSUE FOR COMMENT	12/09/18	AS	LKL	MNI
A	ISSUE FOR COMMENT	31/07/18	AS	LKL	MNI

CUSTOMER : WILMAR INDUSTRIAL COMPLEX PT MNA SERANG, INDONESIA
CONTRACT NO. : –
PROJECT TITLE : DCS SERANG PROJECT
CUSTOMER PROJECT NO. : –

wilmar

PERMIT STAMP AND PROFESSIONAL STAMP AFFIXED ABOVE SHALL APPLY ONLY TO REV(s)

EMERSON.

SCALE: NTS
SIZE: A3
UNITS: mm (inch)
© 2018

EMERSON PROJECT NO.: 3258585
PROJECT TITLE: DCS SERANG PROJECT

TITLE: COVER SHEET

EMERSON DRAWING NO.: 3258585-PSS-PASH-DWG-00010
CUSTOMER DRAWING NO.: –

SHEET NO: 001
REV.: 0

THIS DRAWING IS THE PROPERTY OF EMERSON PROCESS MANAGEMENT. INFORMATION AND KNOW HOW HEREIN ARE CONFIDENTIAL AND MAY NOT BE USED, REPRODUCED OR REVEALED TO OTHERS EXCEPT IN ACCORDANCE WITH CONTRACT OR OTHER WRITTEN CONSENT OF EMERSON PROCESS MANAGEMENT. ANY PERMITTED REPRODUCTION IN WHOLE OR IN PART, INCLUDING SHOP DRAWINGS MUST BEAR OR REFER TO THIS LEGEND.

DRAWING INDEX & REVISION

DRAWING NO.		DRAWING TITLE	DATE	REV.	DATE	REV.	DATE	REV.	DATE	REV.	DATE	REV.	DATE	REV.
3258585-PSS-PASH-DWG-00010	SHT.001	COVER SHEET	31/07/18	A	12/09/18	B	14/11/18	C	29/08/19	0				
3258585-PSS-PASH-DWG-00010	SHT.002	DRAWING INDEX & REVISION	31/07/18	A	12/09/18	B	14/11/18	C	29/08/19	0				
3258585-PSS-PASH-DWG-00010	SHT.003	NETWORK CABINET CR1-NET-001 – (FRONT DOOR VIEW, RIGHT SIDE & LEFT SIDE VIEW)	31/07/18	A	12/09/18	B	14/11/18	C	29/08/19	0				
3258585-PSS-PASH-DWG-00010	SHT.004	NETWORK CABINET CR1-NET-001 – (BOTTOM VIEW)	31/07/18	A	12/09/18	B	14/11/18	C	29/08/19	0				
3258585-PSS-PASH-DWG-00010	SHT.005	NETWORK CABINET CR1-NET-001 – (FRONT VIEW, SECTION A-A & SECTION B-B)	31/07/18	A	12/09/18	B	14/11/18	C	29/08/19	0				
3258585-PSS-PASH-DWG-00010	SHT.006	NETWORK CABINET CR1-NET-001 – BILL OF MATERIAL	31/07/18	A	12/09/18	B	14/11/18	C	29/08/19	0				
3258585-PSS-PASH-DWG-00010	SHT.007	NETWORK CABINET CR1-NET-001 – 240VAC UPS POWER DISTRIBUTION DIAGRAM	31/07/18	A	12/09/18	B	14/11/18	C	29/08/19	0				
3258585-PSS-PASH-DWG-00010	SHT.008	NETWORK CABINET CR1-NET-001 – 24VDC POWER DISTRIBUTION DIAGRAM	31/07/18	A	12/09/18	B	14/11/18	C	29/08/19	0				
3258585-PSS-PASH-DWG-00010	SHT.009	NETWORK CABINET CR2-NET-001 – (FRONT DOOR VIEW, RIGHT SIDE & LEFT SIDE VIEW)	31/07/18	A	12/09/18	B	14/11/18	C	29/08/19	0				
3258585-PSS-PASH-DWG-00010	SHT.010	NETWORK CABINET CR2-NET-001 – (BOTTOM VIEW)	31/07/18	A	12/09/18	B	14/11/18	C	29/08/19	0				
3258585-PSS-PASH-DWG-00010	SHT.011	NETWORK CABINET CR2-NET-001 – (FRONT VIEW, SECTION A-A & SECTION B-B)	31/07/18	A	12/09/18	B	14/11/18	C	29/08/19	0				
3258585-PSS-PASH-DWG-00010	SHT.012	NETWORK CABINET CR2-NET-001 – BILL OF MATERIAL	31/07/18	A	12/09/18	B	14/11/18	C	29/08/19	0				
3258585-PSS-PASH-DWG-00010	SHT.013	NETWORK CABINET CR2-NET-001 – 240VAC UPS POWER DISTRIBUTION DIAGRAM	31/07/18	A	12/09/18	B	14/11/18	C	29/08/19	0				
3258585-PSS-PASH-DWG-00010	SHT.014	NETWORK CABINET CR2-NET-001 – 24VDC POWER DISTRIBUTION DIAGRAM	31/07/18	A	12/09/18	B	14/11/18	C	29/08/19	0				
3258585-PSS-PASH-DWG-00010	SHT.015	NETWORK CABINET CR3-NET-001 – (FRONT DOOR VIEW, RIGHT SIDE & LEFT SIDE VIEW)	31/07/18	A	12/09/18	B	14/11/18	C	29/08/19	0				
3258585-PSS-PASH-DWG-00010	SHT.016	NETWORK CABINET CR3-NET-001 – (BOTTOM VIEW)	31/07/18	A	12/09/18	B	14/11/18	C	29/08/19	0				
3258585-PSS-PASH-DWG-00010	SHT.017	NETWORK CABINET CR3-NET-001 – (FRONT VIEW, SECTION A-A & SECTION B-B)	31/07/18	A	12/09/18	B	14/11/18	C	29/08/19	0				
3258585-PSS-PASH-DWG-00010	SHT.018	NETWORK CABINET CR3-NET-001 – BILL OF MATERIAL	31/07/18	A	12/09/18	B	14/11/18	C	29/08/19	0				
3258585-PSS-PASH-DWG-00010	SHT.019	NETWORK CABINET CR3-NET-001 – 240VAC UPS POWER DISTRIBUTION DIAGRAM	31/07/18	A	12/09/18	B	14/11/18	C	29/08/19	0				
3258585-PSS-PASH-DWG-00010	SHT.020	NETWORK CABINET CR3-NET-001 – 24VDC POWER DISTRIBUTION DIAGRAM	31/07/18	A	12/09/18	B	14/11/18	C	29/08/19	0				
3258585-PSS-PASH-DWG-00010	SHT.021	NETWORK CABINET CR4-NET-001 – (FRONT DOOR VIEW, RIGHT SIDE & LEFT SIDE VIEW)	31/07/18	A	12/09/18	B	14/11/18	C	29/08/19	0				
3258585-PSS-PASH-DWG-00010	SHT.022	NETWORK CABINET CR4-NET-001 – (BOTTOM VIEW)	31/07/18	A	12/09/18	B	14/11/18	C	29/08/19	0				
3258585-PSS-PASH-DWG-00010	SHT.023	NETWORK CABINET CR4-NET-001 – (FRONT VIEW, SECTION A-A & SECTION B-B)	31/07/18	A	12/09/18	B	14/11/18	C	29/08/19	0				
3258585-PSS-PASH-DWG-00010	SHT.024	NETWORK CABINET CR4-NET-001 – BILL OF MATERIAL	31/07/18	A	12/09/18	B	14/11/18	C	29/08/19	0				
3258585-PSS-PASH-DWG-00010	SHT.025	NETWORK CABINET CR4-NET-001 – 240VAC UPS POWER DISTRIBUTION DIAGRAM	31/07/18	A	12/09/18	B	14/11/18	C	29/08/19	0				
3258585-PSS-PASH-DWG-00010	SHT.026	NETWORK CABINET CR4-NET-001 – 24VDC POWER DISTRIBUTION DIAGRAM	31/07/18	A	12/09/18	B	14/11/18	C	29/08/19	0				
3258585-PSS-PASH-DWG-00010	SHT.027	NETWORK CABINET CR5-NET-001 – (FRONT DOOR VIEW, RIGHT SIDE & LEFT SIDE VIEW)	31/07/18	A	12/09/18	B	14/11/18	C	29/08/19	0				
3258585-PSS-PASH-DWG-00010	SHT.028	NETWORK CABINET CR5-NET-001 – (BOTTOM VIEW)	31/07/18	A	12/09/18	B	14/11/18	C	29/08/19	0				
3258585-PSS-PASH-DWG-00010	SHT.029	NETWORK CABINET CR5-NET-001 – (FRONT VIEW, SECTION A-A & SECTION B-B)	31/07/18	A	12/09/18	B	14/11/18	C	29/08/19	0				
3258585-PSS-PASH-DWG-00010	SHT.030	NETWORK CABINET CR5-NET-001 – BILL OF MATERIAL	31/07/18	A	12/09/18	B	14/11/18	C	29/08/19	0				
3258585-PSS-PASH-DWG-00010	SHT.031	NETWORK CABINET CR5-NET-001 – 240VAC UPS POWER DISTRIBUTION DIAGRAM	31/07/18	A	12/09/18	B	14/11/18	C	29/08/19	0				
3258585-PSS-PASH-DWG-00010	SHT.032	NETWORK CABINET CR5-NET-001 – 24VDC POWER DISTRIBUTION DIAGRAM	31/07/18	A	12/09/18	B	14/11/18	C	29/08/19	0				
3258585-PSS-PASH-DWG-00010	SHT.033	NETWORK CABINET CR6-NET-001 – (FRONT DOOR VIEW, RIGHT SIDE & LEFT SIDE VIEW)	31/07/18	A	12/09/18	B	14/11/18	C	29/08/19	0				
3258585-PSS-PASH-DWG-00010	SHT.034	NETWORK CABINET CR6-NET-001 – (BOTTOM VIEW)	31/07/18	A	12/09/18	B	14/11/18	C	29/08/19	0				
3258585-PSS-PASH-DWG-00010	SHT.035	NETWORK CABINET CR6-NET-001 – (FRONT VIEW, SECTION A-A & SECTION B-B)	31/07/18	A	12/09/18	B	14/11/18	C	29/08/19	0				
3258585-PSS-PASH-DWG-00010	SHT.036	NETWORK CABINET CR6-NET-001 – BILL OF MATERIAL	31/07/18	A	12/09/18	B	14/11/18	C	29/08/19	0				
3258585-PSS-PASH-DWG-00010	SHT.037	NETWORK CABINET CR6-NET-001 – 240VAC UPS POWER DISTRIBUTION DIAGRAM	31/07/18	A	12/09/18	B	14/11/18	C	29/08/19	0				
3258585-PSS-PASH-DWG-00010	SHT.038	NETWORK CABINET CR6-NET-001 – 24VDC POWER DISTRIBUTION DIAGRAM	31/07/18	A	12/09/18	B	14/11/18	C	29/08/19	0				

wilmar

PERMIT STAMP AND PROFESSIONAL STAMP AFFIXED ABOVE SHALL APPLY ONLY TO REV(s)

EMERSON.

SCALE: NTS | SIZE: A3
UNITS: mm (inch) | © 2018

EMERSON PROJECT NO.: 3258585
PROJECT TITLE: DCS SERANG PROJECT

TITLE: DRAWING INDEX & REVISION

EMERSON DRAWING NO.: 3258585-PSS-PASH-DWG-00010
CUSTOMER DRAWING NO.: –

SHEET NO: 002
REV.: 0

THIS DRAWING IS THE PROPERTY OF EMERSON PROCESS MANAGEMENT. INFORMATION AND KNOW HOW HEREIN ARE CONFIDENTIAL AND MAY NOT BE USED, REPRODUCED OR REVEALED TO OTHERS EXCEPT IN ACCORDANCE WITH CONTRACT OR OTHER WRITTEN CONSENT OF EMERSON PROCESS MANAGEMENT. ANY PERMITTED REPRODUCTION IN WHOLE OR IN PART, INCLUDING SHOP DRAWINGS MUST BEAR OR REFER TO THIS LEGEND.

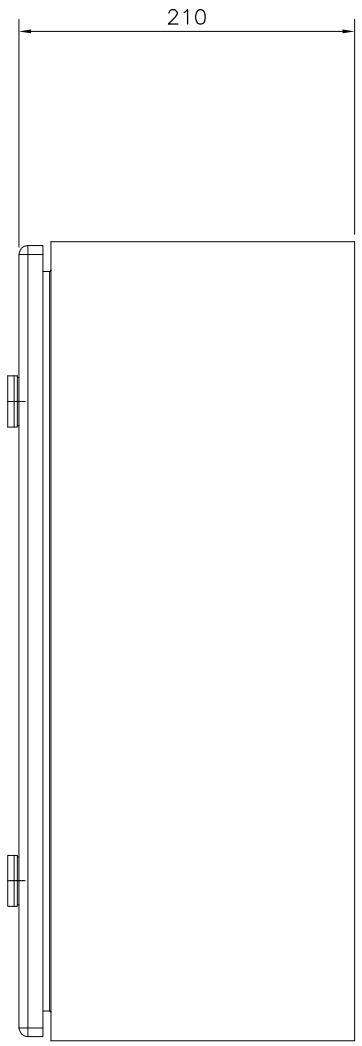

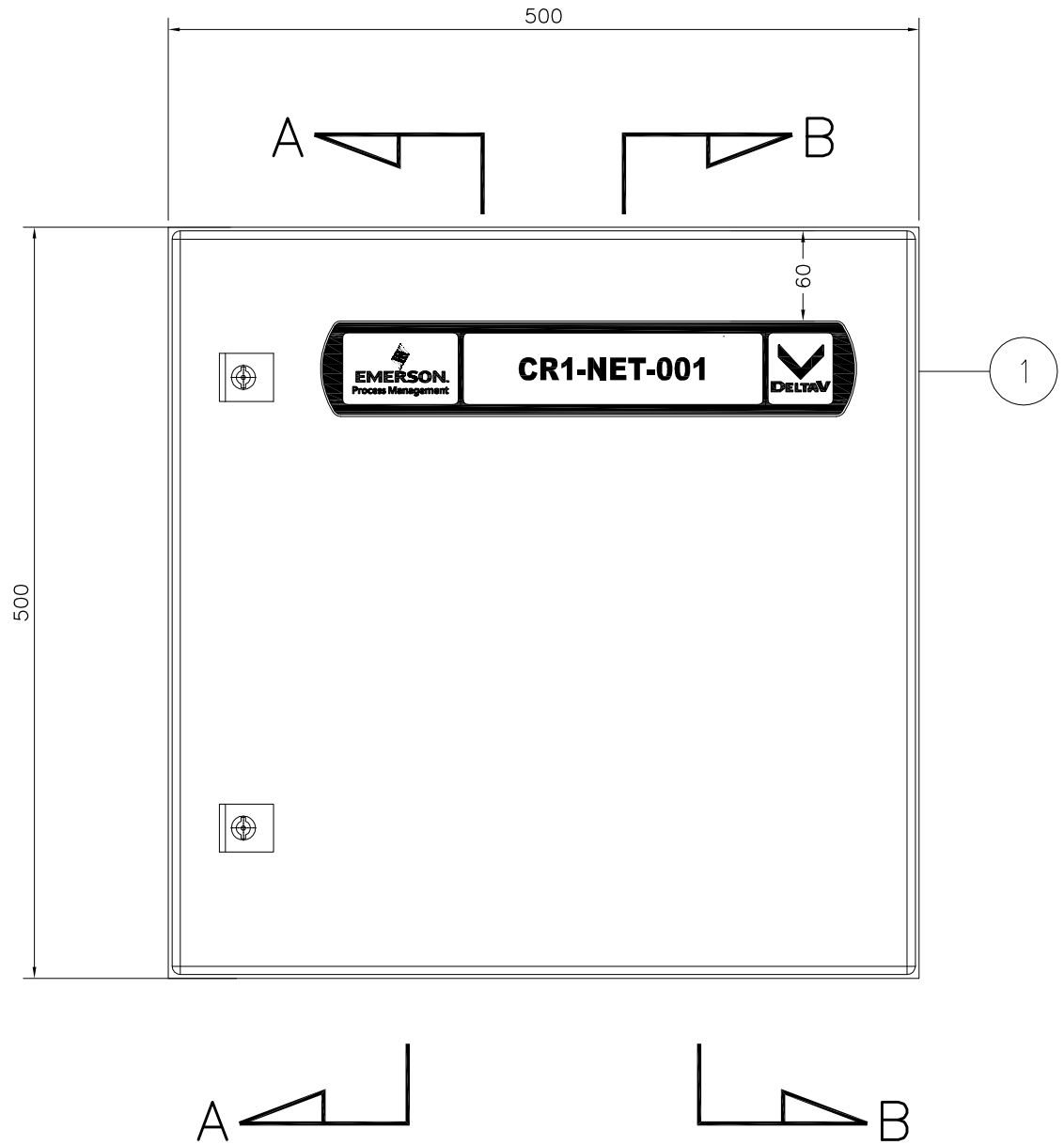

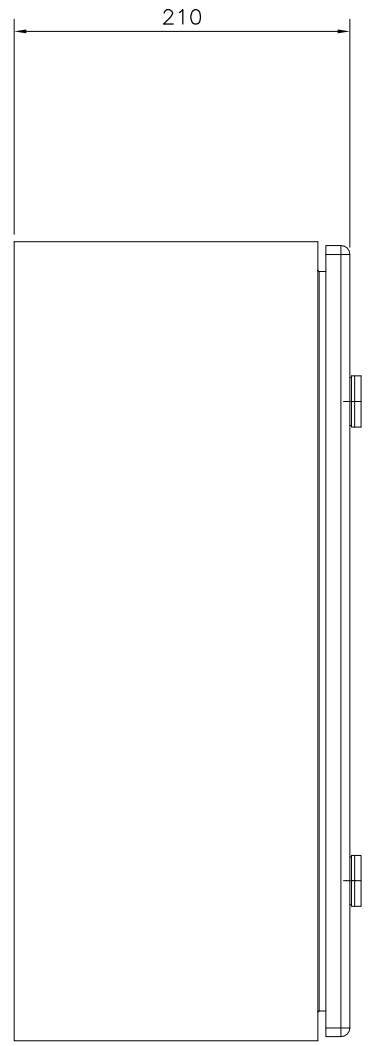

LEFT SIDE VIEW
NETWORK CABINET – CR1–NET–001

FRONT DOOR VIEW
NETWORK CABINET – CR1–NET–001

RIGHT SIDE VIEW
NETWORK CABINET – CR1–NET–001

NOTE: NETWORK CABINET FOR THIN CLIENT
IN CONTROL ROOMS

wilmar	PERMIT STAMP AND PROFESSIONAL STAMP AFFIXED ABOVE SHALL APPLY ONLY TO REV(s)	EMERSON.	SCALE: NTS UNITS: mm (inch)	SIZE: A3 © 2018	EMERSON PROJECT NO.: 3258585 PROJECT TITLE: DCS SERANG PROJECT	TITLE: NETWORK CABINET CR1–NET–001 (FRONT DOOR VIEW, RIGHT SIDE & LEFT SIDE VIEW)	EMERSON DRAWING NO.: 3258585–PSS–PASH–DWG–00010 CUSTOMER DRAWING NO.: –	SHEET NO: 003 REV.: 0

THIS DRAWING IS THE PROPERTY OF EMERSON PROCESS MANAGEMENT. INFORMATION AND KNOW HOW HEREIN ARE CONFIDENTIAL AND MAY NOT BE USED, REPRODUCED OR REVEALED TO OTHERS EXCEPT IN ACCORDANCE WITH CONTRACT OR OTHER WRITTEN CONSENT OF EMERSON PROCESS MANAGEMENT. ANY PERMITTED REPRODUCTION IN WHOLE OR IN PART, INCLUDING SHOP DRAWINGS MUST BEAR OR REFER TO THIS LEGEND.

CABLE ENTRIES	
CABLE GLAND SIZE	QUANTITY
M20	10

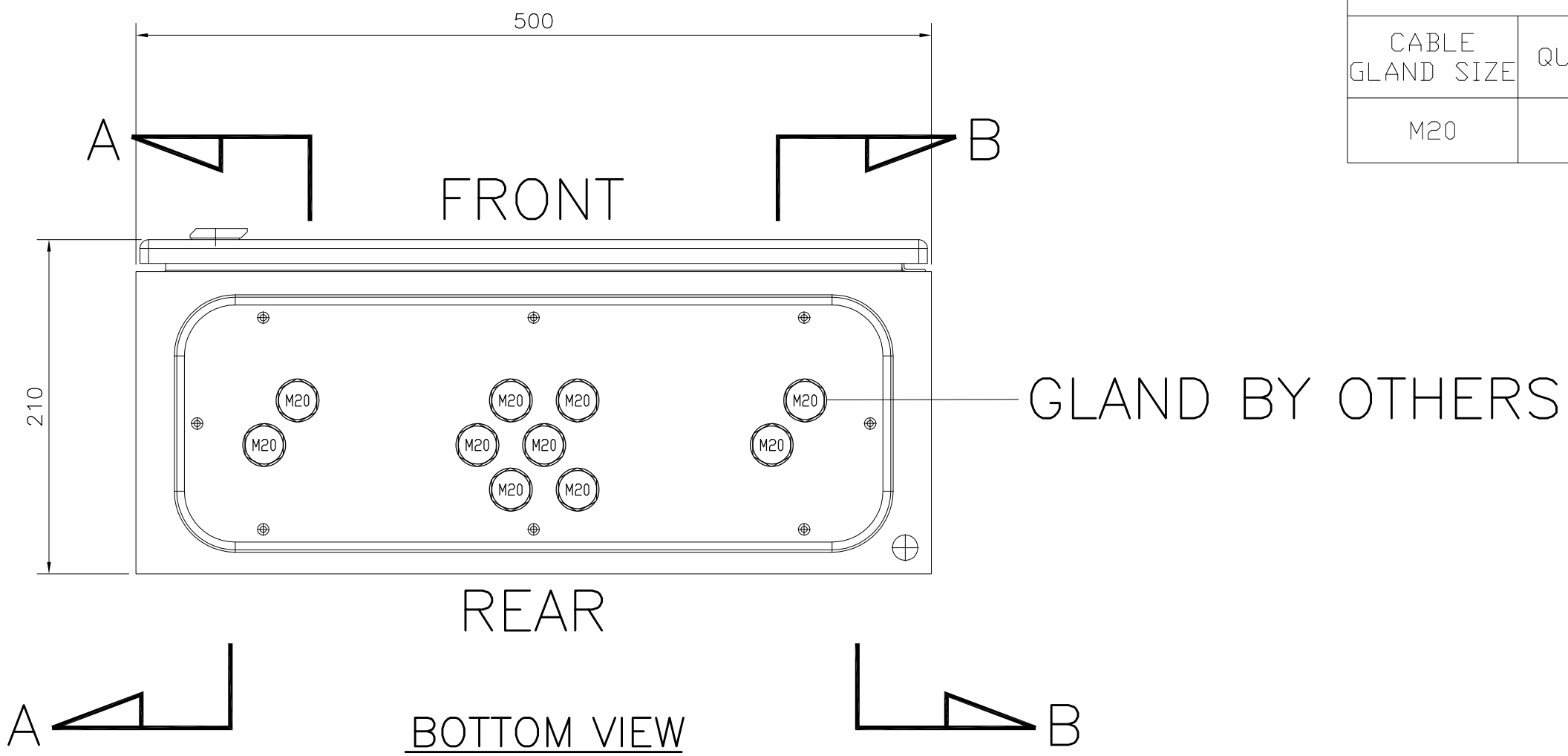

NETWORK CABINET – CR1–NET–001

wilmar	PERMIT STAMP AND PROFESSIONAL STAMP AFFIXED ABOVE SHALL APPLY ONLY TO REV(s)	EMERSON.	SCALE: NTS UNITS: mm (inch)	SIZE: A3 © 2018	EMERSON PROJECT NO.: 3258585 PROJECT TITLE: DCS SERANG PROJECT	TITLE: NETWORK CABINET CR1–NET–001 (BOTTOM VIEW)	EMERSON DRAWING NO.: 3258585–PSS–PASH–DWG–00010 CUSTOMER DRAWING NO.: –	SHEET NO: 004 REV.: 0

THIS DRAWING IS THE PROPERTY OF EMERSON PROCESS MANAGEMENT. INFORMATION AND KNOW HOW HEREIN ARE CONFIDENTIAL AND MAY NOT BE USED, REPRODUCED OR REVEALED TO OTHERS EXCEPT IN ACCORDANCE WITH CONTRACT OR OTHER WRITTEN CONSENT OF EMERSON PROCESS MANAGEMENT. ANY PERMITTED REPRODUCTION IN WHOLE OR IN PART, INCLUDING SHOP DRAWINGS MUST BEAR OR REFER TO THIS LEGEND.

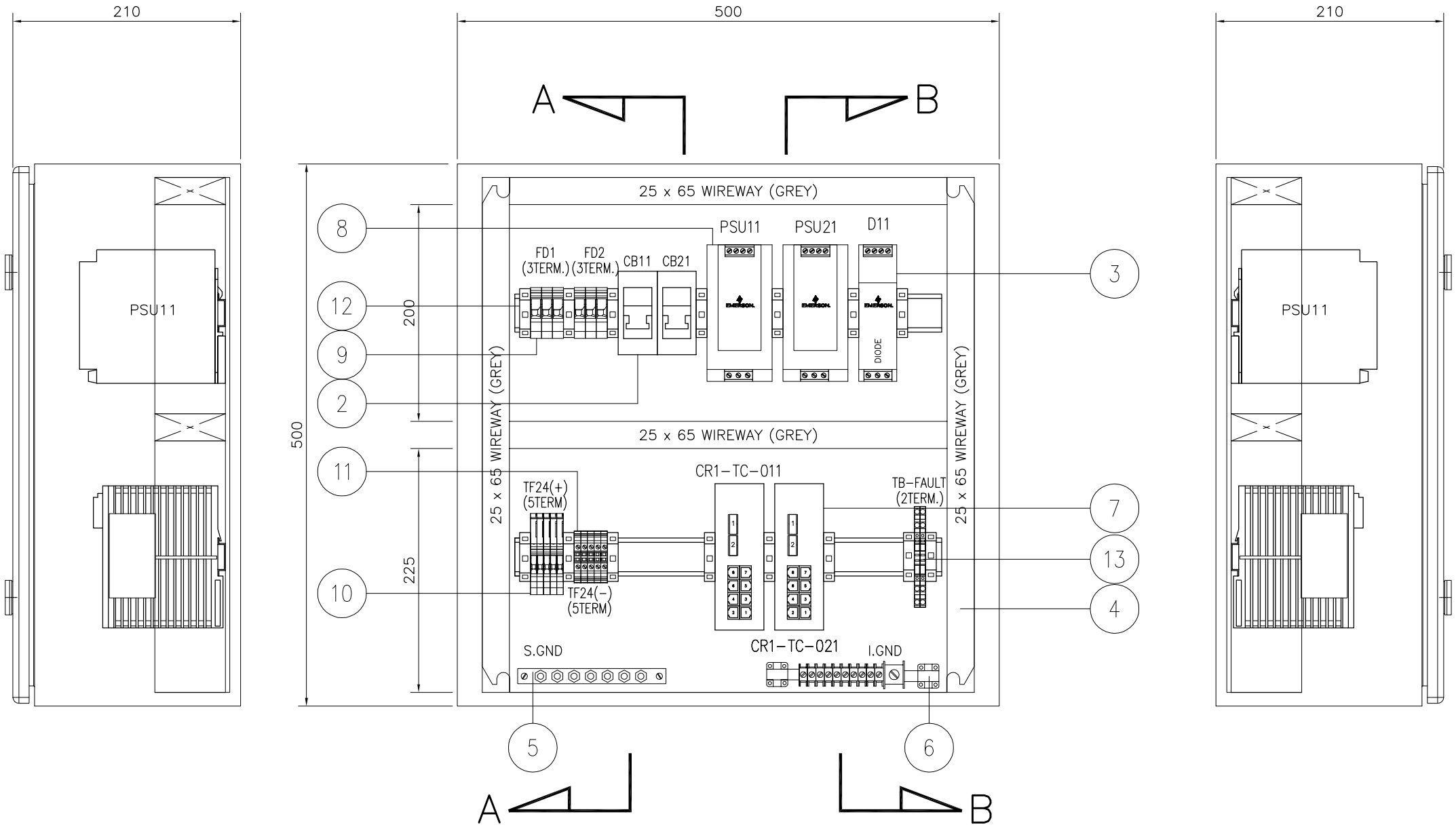

SECTION A–A
NETWORK CABINET – CR1–NET–001

FRONT VIEW
NETWORK CABINET – CR1–NET–001

SECTION B–B
NETWORK CABINET – CR1–NET–001

wilmar	PERMIT STAMP AND PROFESSIONAL STAMP AFFIXED ABOVE SHALL APPLY ONLY TO REV(s)	EMERSON	SCALE: NTS	SIZE: A3	EMERSON PROJECT NO.: 3258585 PROJECT TITLE: DCS SERANG PROJECT	TITLE: NETWORK CABINET CR1–NET–001 (FRONT VIEW, SECTION A–A & SECTION B–B)	EMERSON DRAWING NO.: 3258585–PSS–PASH–DWG–00010	SHEET NO: 005
			UNITS: mm (inch)	© 2018			CUSTOMER DRAWING NO.: –	REV.: 0

THIS DRAWING IS THE PROPERTY OF EMERSON PROCESS MANAGEMENT. INFORMATION AND KNOW HOW HEREIN ARE CONFIDENTIAL AND MAY NOT BE USED, REPRODUCED OR REVEALED TO OTHERS EXCEPT IN ACCORDANCE WITH CONTRACT OR OTHER WRITTEN CONSENT OF EMERSON PROCESS MANAGEMENT. ANY PERMITTED REPRODUCTION IN WHOLE OR IN PART, INCLUDING SHOP DRAWINGS MUST BEAR OR REFER TO THIS LEGEND.

BILL OF MATERIALS

ITEM NO.	DESCRIPTION	PART NUMBER	QTY.	MANUFACTURER
01	RITTAL CABINET (W500 X H500 X D210) FRONT ACCESS	AE1050.500	1 SET	RITTAL
02	AC MCB 2POLE (6A)	IK60N C6A	2 PCS	SCHNEIDER
03	DELTAV BULK POWER SUPPLY REDUNDANCY MODULE, 12 V DC TO 28 V DC, 20 A	VE5134	1 PC	EMERSON PROCESS
04	25 X 65 mm PVC WIREWAY (GREY)	–	1 LOT	CONTRACTOR
05	SAFETY GROUND BAR	–	1 LOT	CONTRACTOR
06	INSTRUMENT GROUND BAR	–	1 LOT	CONTRACTOR
07	ETHERNET SWITCH 8–PORT	ISF3010D	2 PCS	INHAND
08	DELTAV BULK POWER SUPPLY 100–240 V AC TO 24 V DC, 10A	VE5123	2 PCS	EMERSON PROCESS
09	2–COND THROUGH TERMINAL BLOCK, 10MM SQ	2010–1201	6 PCS	WAGO
10	FUSE DISCONNECT TB WITH FUSE BLOW INDICATOR, 24VDC, 4MM SQ	2004–1611/1000–0541	5 PCS	WAGO
11	2–COND THROUGH TERMINAL BLOCK, 4MM SQ	2004–1201	5 PCS	WAGO
12	END STOPPER	249–117	1 LOT	WAGO
13	DOUBLE DECK DISCONNECT TERMINAL BLOCK, 2.5MM SQ	2002–2671	2 PCS	WAGO
14				
15				
16				
17				
18				
19				
20				
21				
22				
23				
24				
25				
26				
27				
28				

wilmar

PERMIT STAMP AND PROFESSIONAL STAMP AFFIXED ABOVE SHALL APPLY ONLY TO REV(s)

EMERSON.

SCALE: NTS | SIZE: A3
UNITS: mm (inch) | © 2018

EMERSON PROJECT NO.: 3258585
PROJECT TITLE: DCS SERANG PROJECT

TITLE: NETWORK CABINET CR1–NET–001 BILL OF MATERIAL

EMERSON DRAWING NO.: 3258585–PSS–PASH–DWG–00010
CUSTOMER DRAWING NO.: –

SHEET NO: 006
REV.: 0

THIS DRAWING IS THE PROPERTY OF EMERSON PROCESS MANAGEMENT. INFORMATION AND KNOW HOW HEREIN ARE CONFIDENTIAL AND MAY NOT BE USED, REPRODUCED OR REVEALED TO OTHERS EXCEPT IN ACCORDANCE WITH CONTRACT OR OTHER WRITTEN CONSENT OF EMERSON PROCESS MANAGEMENT. ANY PERMITTED REPRODUCTION IN WHOLE OR IN PART, INCLUDING SHOP DRAWINGS MUST BEAR OR REFER TO THIS LEGEND.

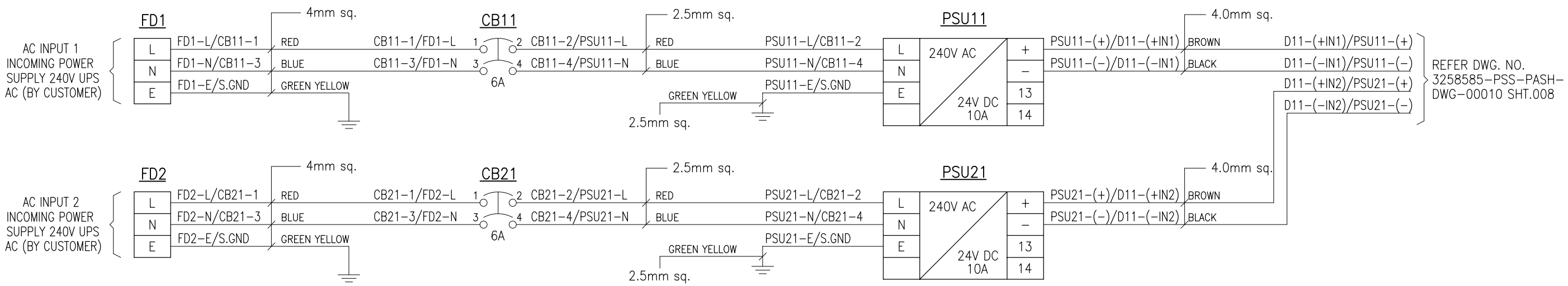

LEGEND:

FROM TO

FD1-L/ISL1-1

TERMINAL & POINT NO.

TERMINAL & POINT NO.

wilmar	PERMIT STAMP AND PROFESSIONAL STAMP AFFIXED ABOVE SHALL APPLY ONLY TO REV(s)	EMERSON	SCALE: NTS UNITS: mm (inch)	SIZE: A3 © 2018	EMERSON PROJECT NO.: 3258585 PROJECT TITLE: DCS SERANG PROJECT	TITLE: NETWORK CABINET CR1-NET-001 240VAC UPS POWER DISTRIBUTION DIAGRAM	EMERSON DRAWING NO.: 3258585-PSS-PASH-DWG-00010 CUSTOMER DRAWING NO.: –	SHEET NO: 007 REV.: 0

THIS DRAWING IS THE PROPERTY OF EMERSON PROCESS MANAGEMENT. INFORMATION AND KNOW HOW HEREIN ARE CONFIDENTIAL AND MAY NOT BE USED, REPRODUCED OR REVEALED TO OTHERS EXCEPT IN ACCORDANCE WITH CONTRACT OR OTHER WRITTEN CONSENT OF EMERSON PROCESS MANAGEMENT. ANY PERMITTED REPRODUCTION IN WHOLE OR IN PART, INCLUDING SHOP DRAWINGS MUST BEAR OR REFER TO THIS LEGEND.

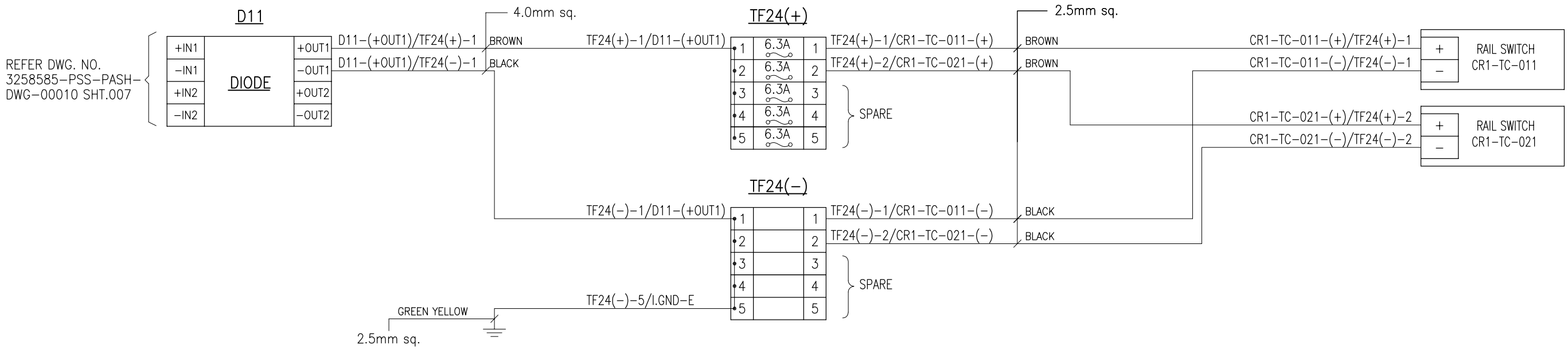

LEGEND:

FROM TO

FD1-L/ISL1-1

TERMINAL & POINT NO.

TERMINAL & POINT NO.

wilmar	PERMIT STAMP AND PROFESSIONAL STAMP AFFIXED ABOVE SHALL APPLY ONLY TO REV(s)	EMERSON.	SCALE: NTS / SIZE: A3	EMERSON PROJECT NO.: 3258585	TITLE: NETWORK CABINET CR1-NET-001 24VDC POWER DISTRIBUTION DIAGRAM	EMERSON DRAWING NO.: 3258585-PSS-PASH-DWG-00010	SHEET NO: 008
			UNITS: mm (inch) / © 2018	PROJECT TITLE: DCS SERANG PROJECT		CUSTOMER DRAWING NO.: –	REV.: 0

THIS DRAWING IS THE PROPERTY OF EMERSON PROCESS MANAGEMENT. INFORMATION AND KNOW HOW HEREIN ARE CONFIDENTIAL AND MAY NOT BE USED, REPRODUCED OR REVEALED TO OTHERS EXCEPT IN ACCORDANCE WITH CONTRACT OR OTHER WRITTEN CONSENT OF EMERSON PROCESS MANAGEMENT. ANY PERMITTED REPRODUCTION IN WHOLE OR IN PART, INCLUDING SHOP DRAWINGS MUST BEAR OR REFER TO THIS LEGEND.

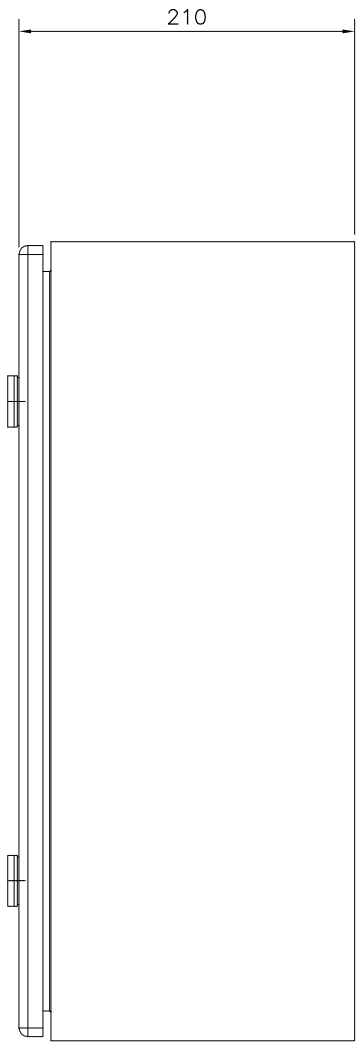

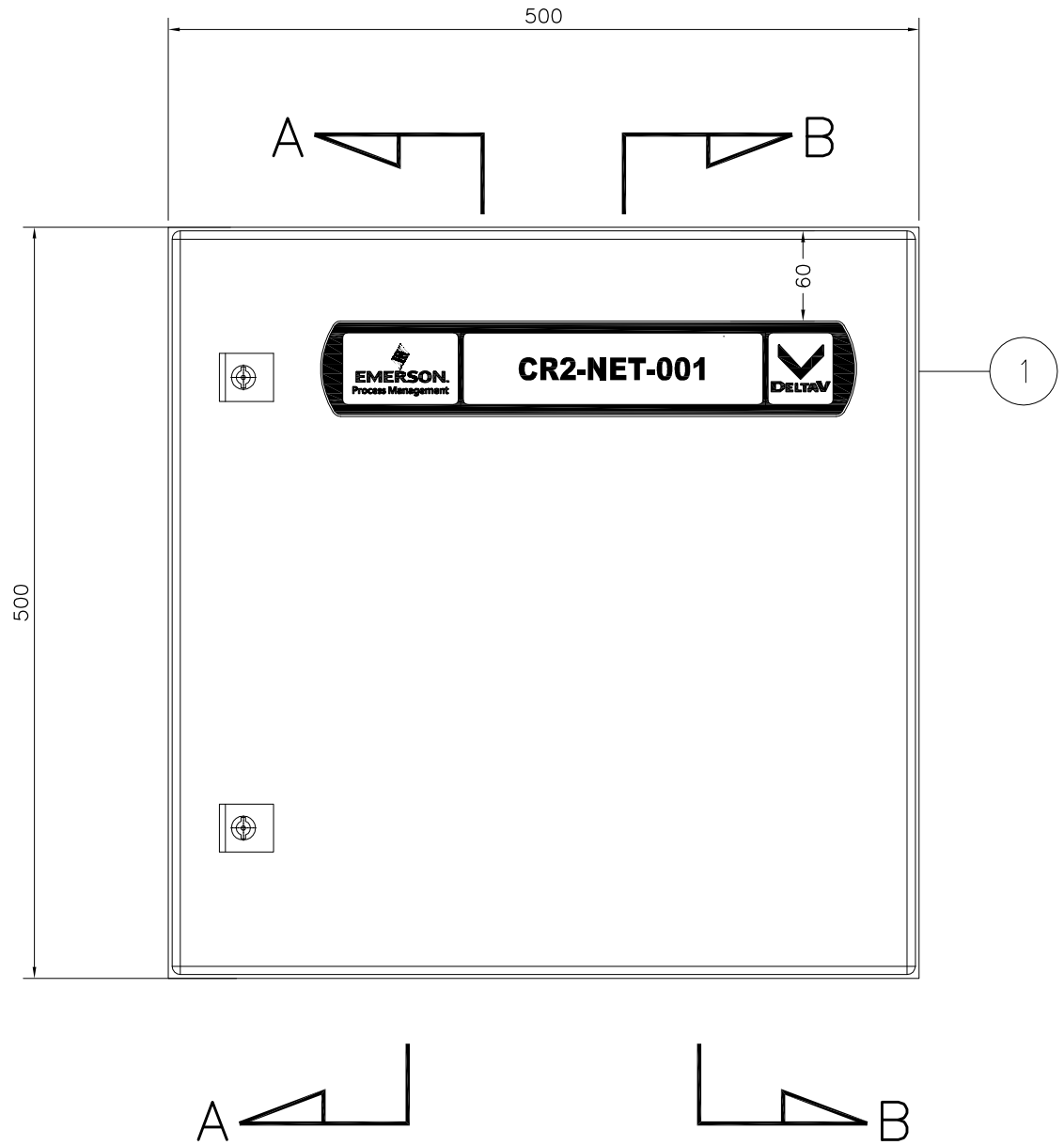

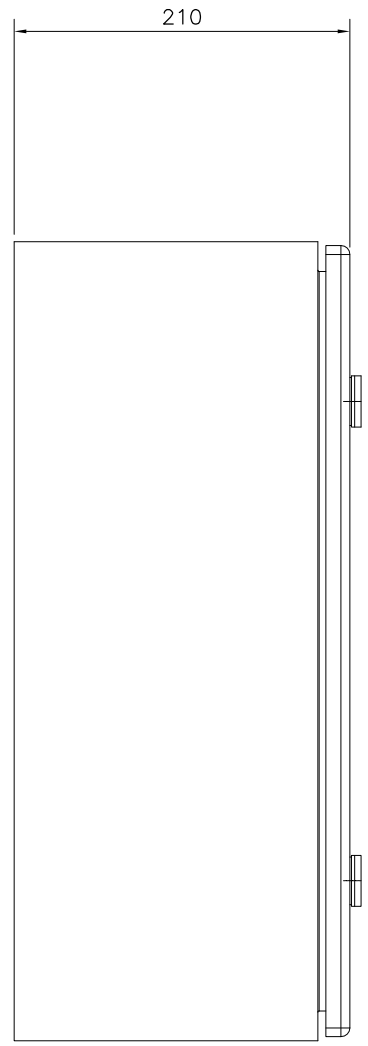

LEFT SIDE VIEW
NETWORK CABINET – CR2–NET–001

FRONT DOOR VIEW
NETWORK CABINET – CR2–NET–001

RIGHT SIDE VIEW
NETWORK CABINET – CR2–NET–001

NOTE: NETWORK CABINET FOR THIN CLIENT
IN CONTROL ROOMS

wilmar	PERMIT STAMP AND PROFESSIONAL STAMP AFFIXED ABOVE SHALL APPLY ONLY TO REV(s)	EMERSON.	SCALE: NTS	SIZE: A3	EMERSON PROJECT NO.: 3258585 PROJECT TITLE: DCS SERANG PROJECT	TITLE: NETWORK CABINET CR2–NET–001 (FRONT DOOR VIEW, RIGHT SIDE & LEFT SIDE VIEW)	EMERSON DRAWING NO.: 3258585–PSS–PASH–DWG–00010	SHEET NO: 009
			UNITS: mm (inch)	© 2018			CUSTOMER DRAWING NO.: –	REV.: 0

THIS DRAWING IS THE PROPERTY OF EMERSON PROCESS MANAGEMENT. INFORMATION AND KNOW HOW HEREIN ARE CONFIDENTIAL AND MAY NOT BE USED, REPRODUCED OR REVEALED TO OTHERS EXCEPT IN ACCORDANCE WITH CONTRACT OR OTHER WRITTEN CONSENT OF EMERSON PROCESS MANAGEMENT. ANY PERMITTED REPRODUCTION IN WHOLE OR IN PART, INCLUDING SHOP DRAWINGS MUST BEAR OR REFER TO THIS LEGEND.

CABLE ENTRIES	
CABLE GLAND SIZE	QUANTITY
M20	10

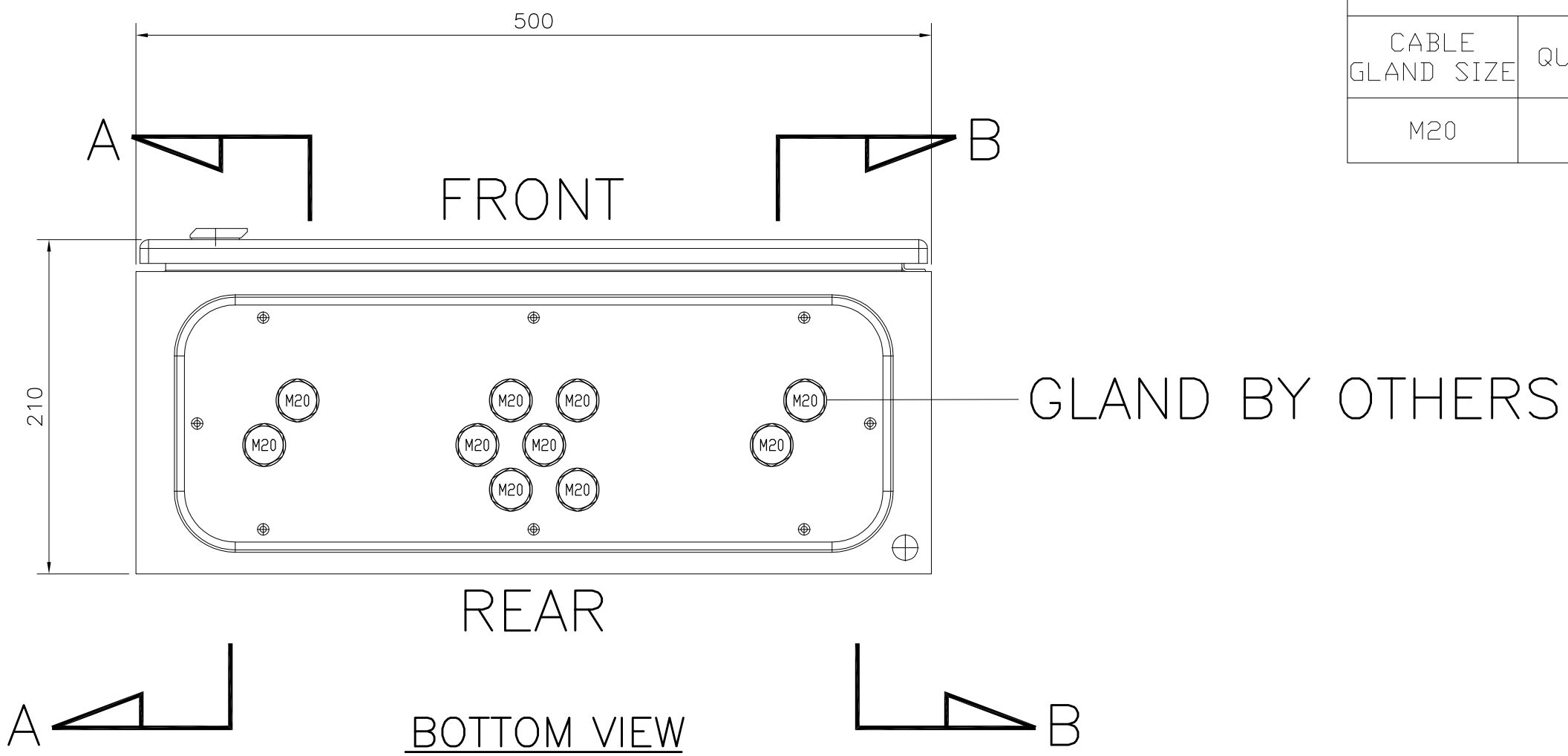

NETWORK CABINET – CR2–NET–001

wilmar	PERMIT STAMP AND PROFESSIONAL STAMP AFFIXED ABOVE SHALL APPLY ONLY TO REV(s)	EMERSON.	SCALE: NTS UNITS: mm (inch)	SIZE: A3 © 2018	EMERSON PROJECT NO.: 3258585 PROJECT TITLE: DCS SERANG PROJECT	TITLE: NETWORK CABINET CR2–NET–001 (BOTTOM VIEW)	EMERSON DRAWING NO.: 3258585–PSS–PASH–DWG–00010 CUSTOMER DRAWING NO.: –	SHEET NO: 010 REV.: 0

THIS DRAWING IS THE PROPERTY OF EMERSON PROCESS MANAGEMENT. INFORMATION AND KNOW HOW HEREIN ARE CONFIDENTIAL AND MAY NOT BE USED, REPRODUCED OR REVEALED TO OTHERS EXCEPT IN ACCORDANCE WITH CONTRACT OR OTHER WRITTEN CONSENT OF EMERSON PROCESS MANAGEMENT. ANY PERMITTED REPRODUCTION IN WHOLE OR IN PART, INCLUDING SHOP DRAWINGS MUST BEAR OR REFER TO THIS LEGEND.

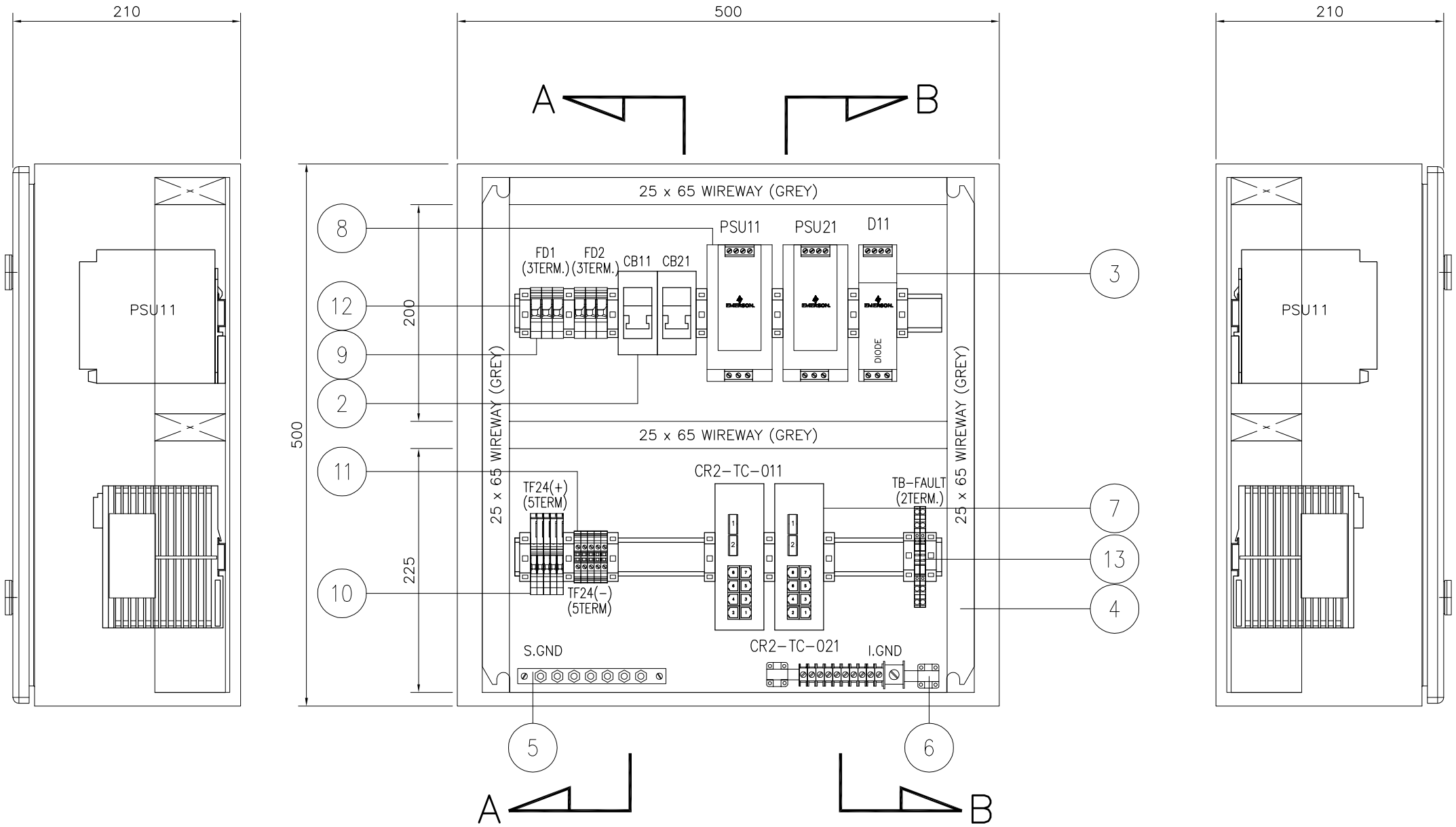

SECTION A–A
NETWORK CABINET – CR2–NET–001

FRONT VIEW
NETWORK CABINET – CR2–NET–001

SECTION B–B
NETWORK CABINET – CR2–NET–001

wilmar	PERMIT STAMP AND PROFESSIONAL STAMP AFFIXED ABOVE SHALL APPLY ONLY TO REV(s)	EMERSON	SCALE: NTS	SIZE: A3	EMERSON PROJECT NO.: 3258585 PROJECT TITLE: DCS SERANG PROJECT	TITLE: NETWORK CABINET CR2–NET–001 (FRONT VIEW, SECTION A–A & SECTION B–B)	EMERSON DRAWING NO.: 3258585–PSS–PASH–DWG–00010	SHEET NO: 011
			UNITS: mm (inch)	© 2018			CUSTOMER DRAWING NO.: –	REV.: 0

THIS DRAWING IS THE PROPERTY OF EMERSON PROCESS MANAGEMENT. INFORMATION AND KNOW HOW HEREIN ARE CONFIDENTIAL AND MAY NOT BE USED, REPRODUCED OR REVEALED TO OTHERS EXCEPT IN ACCORDANCE WITH CONTRACT OR OTHER WRITTEN CONSENT OF EMERSON PROCESS MANAGEMENT. ANY PERMITTED REPRODUCTION IN WHOLE OR IN PART, INCLUDING SHOP DRAWINGS MUST BEAR OR REFER TO THIS LEGEND.

BILL OF MATERIALS

ITEM NO.	DESCRIPTION	PART NUMBER	QTY.	MANUFACTURER
01	RITTAL CABINET (W500 X H500 X D210) FRONT ACCESS	AE1050.500	1 SET	RITTAL
02	AC MCB 2POLE (6A)	IK60N C6A	2 PCS	SCHNEIDER
03	DELTAV BULK POWER SUPPLY REDUNDANCY MODULE, 12 V DC TO 28 V DC, 20 A	VE5134	1 PC	EMERSON PROCESS
04	25 X 65 mm PVC WIREWAY (GREY)	–	1 LOT	CONTRACTOR
05	SAFETY GROUND BAR	–	1 LOT	CONTRACTOR
06	INSTRUMENT GROUND BAR	–	1 LOT	CONTRACTOR
07	ETHERNET SWITCH 8–PORT	ISF3010D	2 PCS	INHAND
08	DELTAV BULK POWER SUPPLY 100–240 V AC TO 24 V DC, 10A	VE5123	2 PCS	EMERSON PROCESS
09	2–COND THROUGH TERMINAL BLOCK, 10MM SQ	2010–1201	6 PCS	WAGO
10	FUSE DISCONNECT TB WITH FUSE BLOW INDICATOR, 24VDC, 4MM SQ	2004–1611/1000–0541	5 PCS	WAGO
11	2–COND THROUGH TERMINAL BLOCK, 4MM SQ	2004–1201	5 PCS	WAGO
12	END STOPPER	249–117	1 LOT	WAGO
13	DOUBLE DECK DISCONNECT TERMINAL BLOCK, 2.5MM SQ	2002–2671	2 PCS	WAGO
14				
15				
16				
17				
18				
19				
20				
21				
22				
23				
24				
25				
26				
27				
28				

wilmar

PERMIT STAMP AND PROFESSIONAL STAMP AFFIXED ABOVE SHALL APPLY ONLY TO REV(s)

EMERSON.

SCALE: NTS | SIZE: A3
UNITS: mm (inch) | © 2018

EMERSON PROJECT NO.: 3258585
PROJECT TITLE: DCS SERANG PROJECT

TITLE: NETWORK CABINET CR2–NET–001 BILL OF MATERIAL

EMERSON DRAWING NO.: 3258585–PSS–PASH–DWG–00010
CUSTOMER DRAWING NO.: –

SHEET NO: 012
REV.: 0

THIS DRAWING IS THE PROPERTY OF EMERSON PROCESS MANAGEMENT. INFORMATION AND KNOW HOW HEREIN ARE CONFIDENTIAL AND MAY NOT BE USED, REPRODUCED OR REVEALED TO OTHERS EXCEPT IN ACCORDANCE WITH CONTRACT OR OTHER WRITTEN CONSENT OF EMERSON PROCESS MANAGEMENT. ANY PERMITTED REPRODUCTION IN WHOLE OR IN PART, INCLUDING SHOP DRAWINGS MUST BEAR OR REFER TO THIS LEGEND.

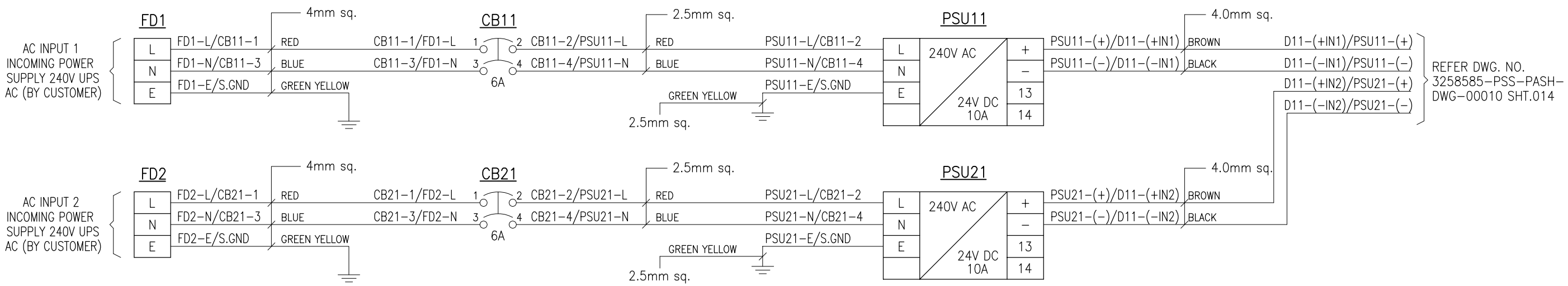

LEGEND:

FROM TO

FD1-L/ISL1-1

TERMINAL & POINT NO.

TERMINAL & POINT NO.

wilmar	PERMIT STAMP AND PROFESSIONAL STAMP AFFIXED ABOVE SHALL APPLY ONLY TO REV(s)	EMERSON	SCALE: NTS UNITS: mm (inch)	SIZE: A3 © 2018	EMERSON PROJECT NO.: 3258585 PROJECT TITLE: DCS SERANG PROJECT	TITLE: NETWORK CABINET CR2-NET-001 240VAC UPS POWER DISTRIBUTION DIAGRAM	EMERSON DRAWING NO.: 3258585-PSS-PASH-DWG-00010 CUSTOMER DRAWING NO.: –	SHEET NO: 013 REV.: 0

THIS DRAWING IS THE PROPERTY OF EMERSON PROCESS MANAGEMENT. INFORMATION AND KNOW HOW HEREIN ARE CONFIDENTIAL AND MAY NOT BE USED, REPRODUCED OR REVEALED TO OTHERS EXCEPT IN ACCORDANCE WITH CONTRACT OR OTHER WRITTEN CONSENT OF EMERSON PROCESS MANAGEMENT. ANY PERMITTED REPRODUCTION IN WHOLE OR IN PART, INCLUDING SHOP DRAWINGS MUST BEAR OR REFER TO THIS LEGEND.

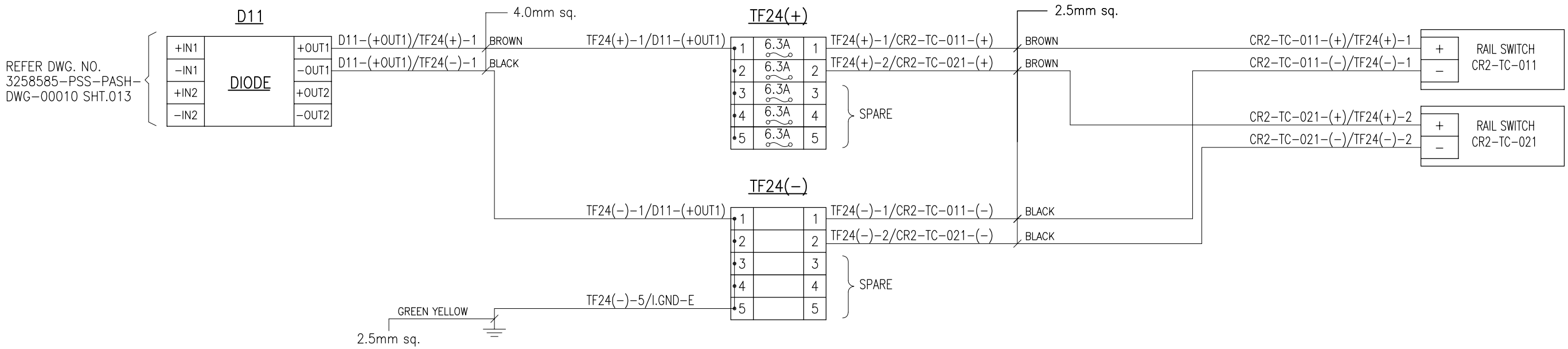

LEGEND:

FROM TO

FD1-L/ISL1-1

TERMINAL & POINT NO.

TERMINAL & POINT NO.

wilmar	PERMIT STAMP AND PROFESSIONAL STAMP AFFIXED ABOVE SHALL APPLY ONLY TO REV(s)	EMERSON.	SCALE: NTS / SIZE: A3	EMERSON PROJECT NO.: 3258585	TITLE: NETWORK CABINET CR2-NET-001 24VDC POWER DISTRIBUTION DIAGRAM	EMERSON DRAWING NO.: 3258585-PSS-PASH-DWG-00010	SHEET NO: 014
			UNITS: mm (inch) / © 2018	PROJECT TITLE: DCS SERANG PROJECT		CUSTOMER DRAWING NO.: –	REV.: 0

THIS DRAWING IS THE PROPERTY OF EMERSON PROCESS MANAGEMENT. INFORMATION AND KNOW HOW HEREIN ARE CONFIDENTIAL AND MAY NOT BE USED, REPRODUCED OR REVEALED TO OTHERS EXCEPT IN ACCORDANCE WITH CONTRACT OR OTHER WRITTEN CONSENT OF EMERSON PROCESS MANAGEMENT. ANY PERMITTED REPRODUCTION IN WHOLE OR IN PART, INCLUDING SHOP DRAWINGS MUST BEAR OR REFER TO THIS LEGEND.

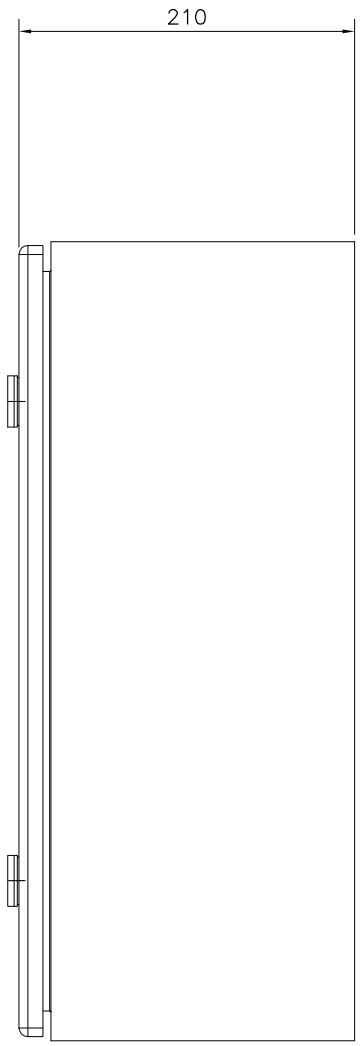

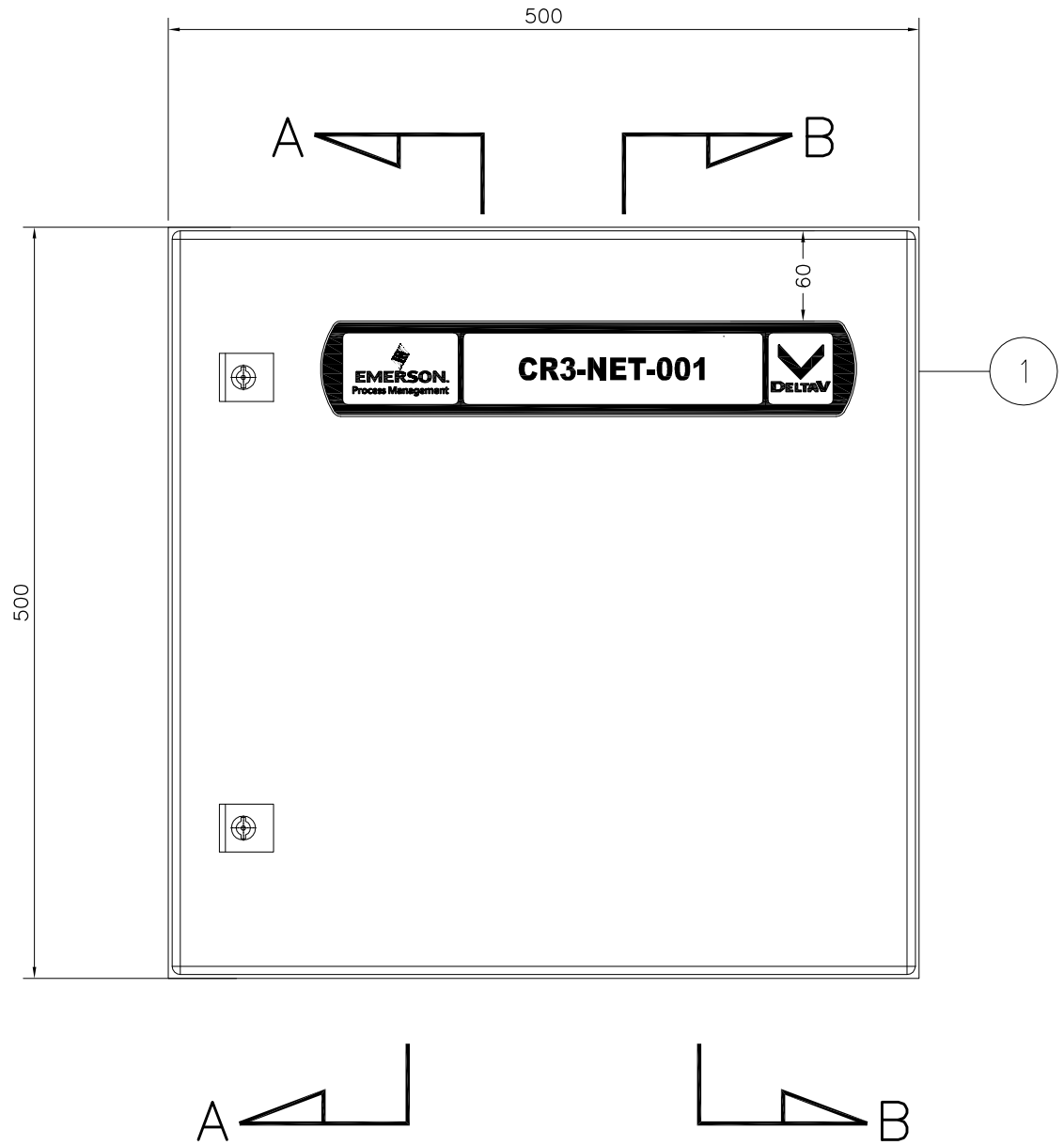

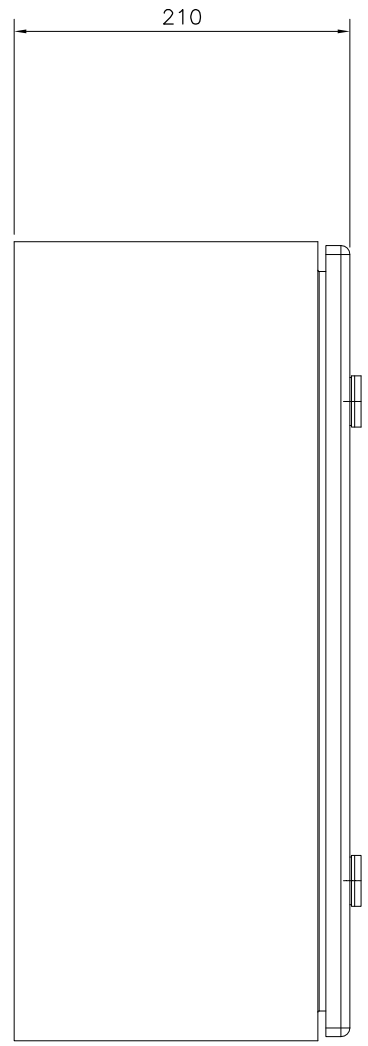

LEFT SIDE VIEW
NETWORK CABINET – CR3–NET–001

FRONT DOOR VIEW
NETWORK CABINET – CR3–NET–001

RIGHT SIDE VIEW
NETWORK CABINET – CR3–NET–001

NOTE: NETWORK CABINET FOR THIN CLIENT
IN CONTROL ROOMS

wilmar	PERMIT STAMP AND PROFESSIONAL STAMP AFFIXED ABOVE SHALL APPLY ONLY TO REV(s)	EMERSON.	SCALE: NTS	SIZE: A3	EMERSON PROJECT NO.: 3258585 PROJECT TITLE: DCS SERANG PROJECT	TITLE: NETWORK CABINET CR3–NET–001 (FRONT DOOR VIEW, RIGHT SIDE & LEFT SIDE VIEW)	EMERSON DRAWING NO.: 3258585–PSS–PASH–DWG–00010	SHEET NO: 015
			UNITS: mm (inch)	© 2018			CUSTOMER DRAWING NO.: –	REV.: 0

THIS DRAWING IS THE PROPERTY OF EMERSON PROCESS MANAGEMENT. INFORMATION AND KNOW HOW HEREIN ARE CONFIDENTIAL AND MAY NOT BE USED, REPRODUCED OR REVEALED TO OTHERS EXCEPT IN ACCORDANCE WITH CONTRACT OR OTHER WRITTEN CONSENT OF EMERSON PROCESS MANAGEMENT. ANY PERMITTED REPRODUCTION IN WHOLE OR IN PART, INCLUDING SHOP DRAWINGS MUST BEAR OR REFER TO THIS LEGEND.

CABLE ENTRIES	
CABLE GLAND SIZE	QUANTITY
M20	10

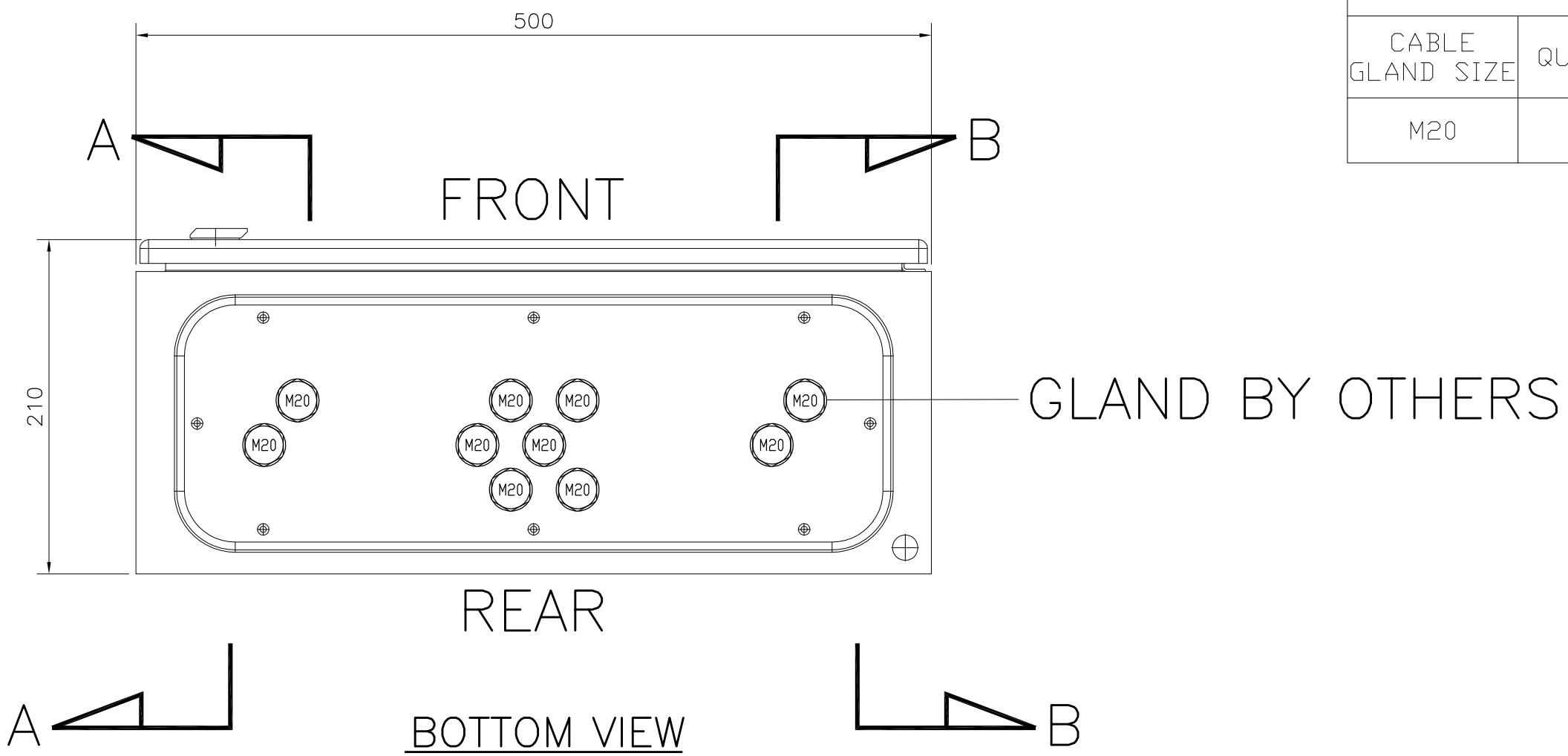

NETWORK CABINET – CR3–NET–001

wilmar	PERMIT STAMP AND PROFESSIONAL STAMP AFFIXED ABOVE SHALL APPLY ONLY TO REV(s)	EMERSON.	SCALE: NTS UNITS: mm (inch)	SIZE: A3 © 2018	EMERSON PROJECT NO.: 3258585 PROJECT TITLE: DCS SERANG PROJECT	TITLE: NETWORK CABINET CR3–NET–001 (BOTTOM VIEW)	EMERSON DRAWING NO.: 3258585–PSS–PASH–DWG–00010 CUSTOMER DRAWING NO.: –	SHEET NO: 016 REV.: 0

THIS DRAWING IS THE PROPERTY OF EMERSON PROCESS MANAGEMENT. INFORMATION AND KNOW HOW HEREIN ARE CONFIDENTIAL AND MAY NOT BE USED, REPRODUCED OR REVEALED TO OTHERS EXCEPT IN ACCORDANCE WITH CONTRACT OR OTHER WRITTEN CONSENT OF EMERSON PROCESS MANAGEMENT. ANY PERMITTED REPRODUCTION IN WHOLE OR IN PART, INCLUDING SHOP DRAWINGS MUST BEAR OR REFER TO THIS LEGEND.

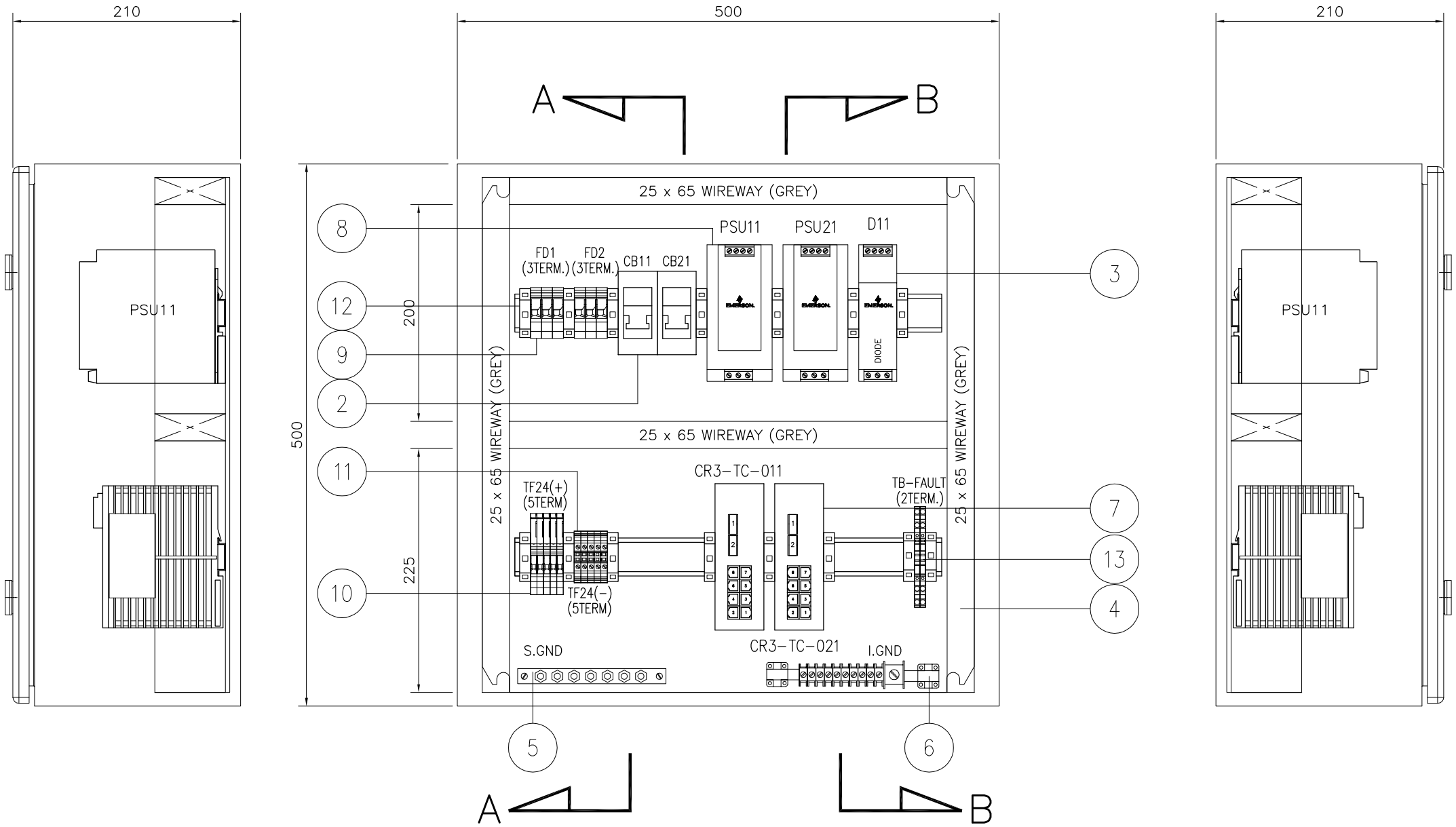

SECTION A–A
NETWORK CABINET – CR3–NET–001

FRONT VIEW
NETWORK CABINET – CR3–NET–001

SECTION B–B
NETWORK CABINET – CR3–NET–001

wilmar	PERMIT STAMP AND PROFESSIONAL STAMP AFFIXED ABOVE SHALL APPLY ONLY TO REV(s)	EMERSON	SCALE: NTS	SIZE: A3	EMERSON PROJECT NO.: 3258585 PROJECT TITLE: DCS SERANG PROJECT	TITLE: NETWORK CABINET CR3–NET–001 (FRONT VIEW, SECTION A–A & SECTION B–B)	EMERSON DRAWING NO.: 3258585–PSS–PASH–DWG–00010	SHEET NO: 017
			UNITS: mm (inch)	© 2018			CUSTOMER DRAWING NO.: –	REV.: 0

THIS DRAWING IS THE PROPERTY OF EMERSON PROCESS MANAGEMENT. INFORMATION AND KNOW HOW HEREIN ARE CONFIDENTIAL AND MAY NOT BE USED, REPRODUCED OR REVEALED TO OTHERS EXCEPT IN ACCORDANCE WITH CONTRACT OR OTHER WRITTEN CONSENT OF EMERSON PROCESS MANAGEMENT. ANY PERMITTED REPRODUCTION IN WHOLE OR IN PART, INCLUDING SHOP DRAWINGS MUST BEAR OR REFER TO THIS LEGEND.

BILL OF MATERIALS

ITEM NO.	DESCRIPTION	PART NUMBER	QTY.	MANUFACTURER
01	RITTAL CABINET (W500 X H500 X D210) FRONT ACCESS	AE1050.500	1 SET	RITTAL
02	AC MCB 2POLE (6A)	IK60N C6A	2 PCS	SCHNEIDER
03	DELTAV BULK POWER SUPPLY REDUNDANCY MODULE, 12 V DC TO 28 V DC, 20 A	VE5134	1 PC	EMERSON PROCESS
04	25 X 65 mm PVC WIREWAY (GREY)	–	1 LOT	CONTRACTOR
05	SAFETY GROUND BAR	–	1 LOT	CONTRACTOR
06	INSTRUMENT GROUND BAR	–	1 LOT	CONTRACTOR
07	ETHERNET SWITCH 8–PORT	ISF3010D	2 PCS	INHAND
08	DELTAV BULK POWER SUPPLY 100–240 V AC TO 24 V DC, 10A	VE5123	2 PCS	EMERSON PROCESS
09	2–COND THROUGH TERMINAL BLOCK, 10MM SQ	2010–1201	6 PCS	WAGO
10	FUSE DISCONNECT TB WITH FUSE BLOW INDICATOR, 24VDC, 4MM SQ	2004–1611/1000–0541	5 PCS	WAGO
11	2–COND THROUGH TERMINAL BLOCK, 4MM SQ	2004–1201	5 PCS	WAGO
12	END STOPPER	249–117	1 LOT	WAGO
13	DOUBLE DECK DISCONNECT TERMINAL BLOCK, 2.5MM SQ	2002–2671	2 PCS	WAGO
14				
15				
16				
17				
18				
19				
20				
21				
22				
23				
24				
25				
26				
27				
28				

wilmar

PERMIT STAMP AND PROFESSIONAL STAMP AFFIXED ABOVE SHALL APPLY ONLY TO REV(s)

EMERSON.

SCALE: NTS | SIZE: A3
UNITS: mm (inch) | © 2018

EMERSON PROJECT NO.: 3258585
PROJECT TITLE: DCS SERANG PROJECT

TITLE: NETWORK CABINET CR3–NET–001 BILL OF MATERIAL

EMERSON DRAWING NO.: 3258585–PSS–PASH–DWG–00010
CUSTOMER DRAWING NO.: –

SHEET NO: 018
REV.: 0

THIS DRAWING IS THE PROPERTY OF EMERSON PROCESS MANAGEMENT. INFORMATION AND KNOW HOW HEREIN ARE CONFIDENTIAL AND MAY NOT BE USED, REPRODUCED OR REVEALED TO OTHERS EXCEPT IN ACCORDANCE WITH CONTRACT OR OTHER WRITTEN CONSENT OF EMERSON PROCESS MANAGEMENT. ANY PERMITTED REPRODUCTION IN WHOLE OR IN PART, INCLUDING SHOP DRAWINGS MUST BEAR OR REFER TO THIS LEGEND.

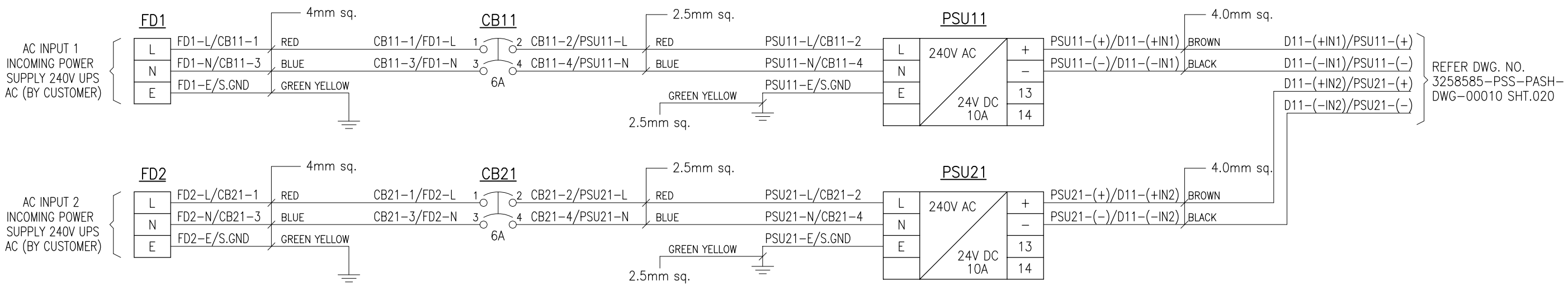

LEGEND:

FROM TO

FD1-L/ISL1-1

TERMINAL & POINT NO.

TERMINAL & POINT NO.

wilmar	PERMIT STAMP AND PROFESSIONAL STAMP AFFIXED ABOVE SHALL APPLY ONLY TO REV(s)	EMERSON	SCALE: NTS UNITS: mm (inch)	SIZE: A3 © 2018	EMERSON PROJECT NO.: 3258585 PROJECT TITLE: DCS SERANG PROJECT	TITLE: NETWORK CABINET CR3-NET-001 240VAC UPS POWER DISTRIBUTION DIAGRAM	EMERSON DRAWING NO.: 3258585-PSS-PASH-DWG-00010 CUSTOMER DRAWING NO.: –	SHEET NO: 019 REV.: 0

THIS DRAWING IS THE PROPERTY OF EMERSON PROCESS MANAGEMENT. INFORMATION AND KNOW HOW HEREIN ARE CONFIDENTIAL AND MAY NOT BE USED, REPRODUCED OR REVEALED TO OTHERS EXCEPT IN ACCORDANCE WITH CONTRACT OR OTHER WRITTEN CONSENT OF EMERSON PROCESS MANAGEMENT. ANY PERMITTED REPRODUCTION IN WHOLE OR IN PART, INCLUDING SHOP DRAWINGS MUST BEAR OR REFER TO THIS LEGEND.

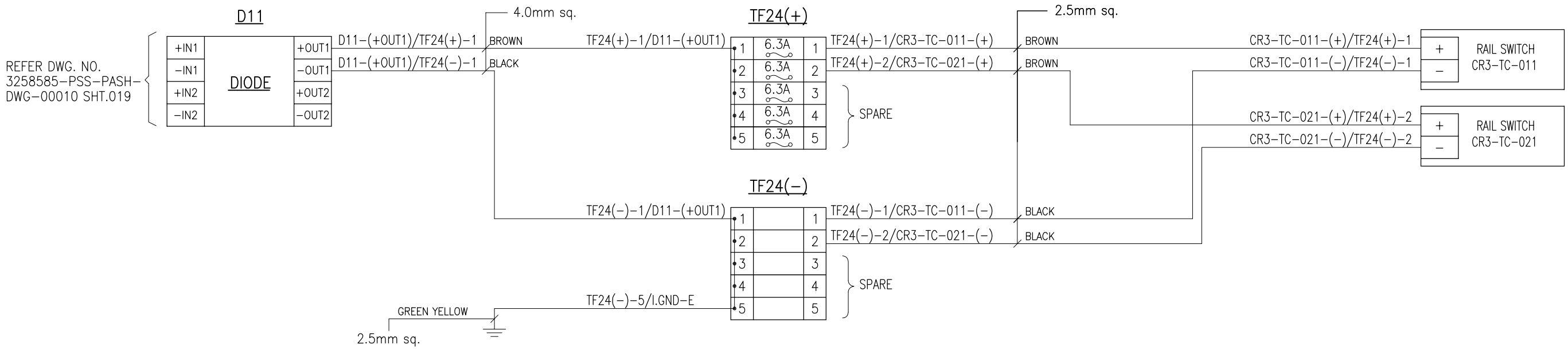

LEGEND:

FROM TO

FD1-L/ISL1-1

TERMINAL & POINT NO.

TERMINAL & POINT NO.

wilmar	PERMIT STAMP AND PROFESSIONAL STAMP AFFIXED ABOVE SHALL APPLY ONLY TO REV(s)	EMERSON.	SCALE: NTS / SIZE: A3	EMERSON PROJECT NO.: 3258585	TITLE: NETWORK CABINET CR3-NET-001 24VDC POWER DISTRIBUTION DIAGRAM	EMERSON DRAWING NO.: 3258585-PSS-PASH-DWG-00010	SHEET NO: 020
			UNITS: mm (inch) / © 2018	PROJECT TITLE: DCS SERANG PROJECT		CUSTOMER DRAWING NO.: –	REV.: 0

THIS DRAWING IS THE PROPERTY OF EMERSON PROCESS MANAGEMENT. INFORMATION AND KNOW HOW HEREIN ARE CONFIDENTIAL AND MAY NOT BE USED, REPRODUCED OR REVEALED TO OTHERS EXCEPT IN ACCORDANCE WITH CONTRACT OR OTHER WRITTEN CONSENT OF EMERSON PROCESS MANAGEMENT. ANY PERMITTED REPRODUCTION IN WHOLE OR IN PART, INCLUDING SHOP DRAWINGS MUST BEAR OR REFER TO THIS LEGEND.

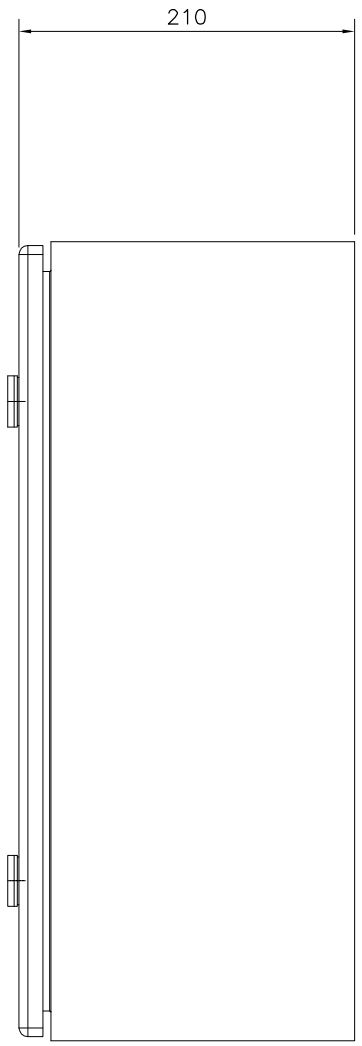

LEFT SIDE VIEW

NETWORK CABINET – CR4–NET–001

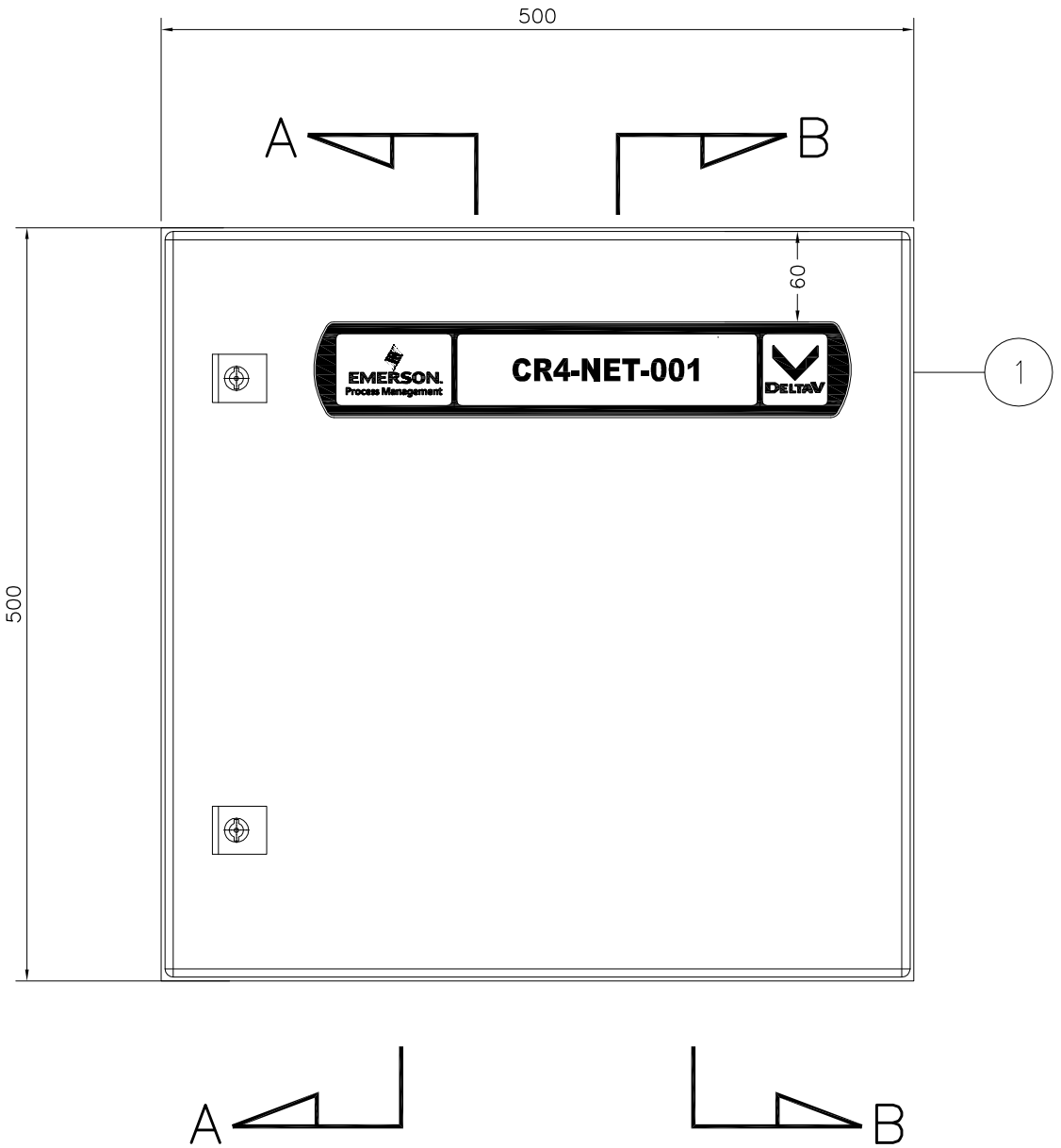

FRONT DOOR VIEW

NETWORK CABINET – CR4–NET–001

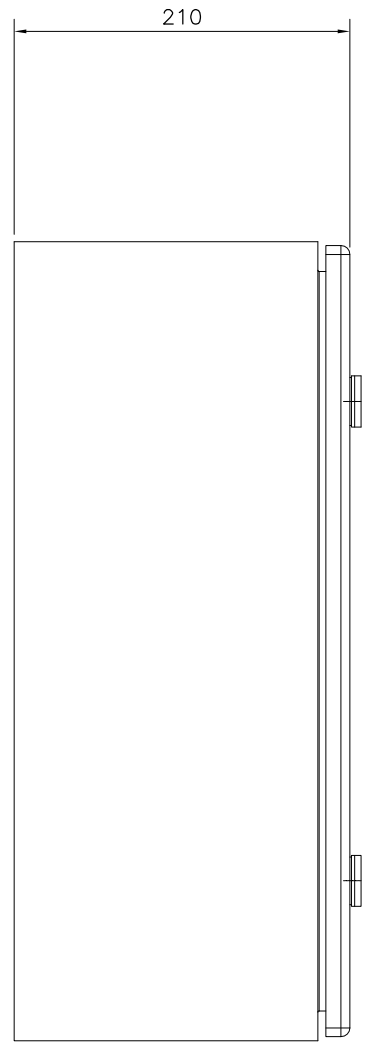

RIGHT SIDE VIEW

NETWORK CABINET – CR4–NET–001

NOTE: NETWORK CABINET FOR THIN CLIENT
IN CONTROL ROOMS

wilmar	PERMIT STAMP AND PROFESSIONAL STAMP AFFIXED ABOVE SHALL APPLY ONLY TO REV(s)	EMERSON.	SCALE: NTS UNITS: mm (inch)	SIZE: A3 © 2018	EMERSON PROJECT NO.: 3258585 PROJECT TITLE: DCS SERANG PROJECT	TITLE: NETWORK CABINET CR4–NET–001 (FRONT DOOR VIEW, RIGHT SIDE & LEFT SIDE VIEW)	EMERSON DRAWING NO.: 3258585–PSS–PASH–DWG–00010 CUSTOMER DRAWING NO.: –	SHEET NO: 021 REV.: 0

THIS DRAWING IS THE PROPERTY OF EMERSON PROCESS MANAGEMENT. INFORMATION AND KNOW HOW HEREIN ARE CONFIDENTIAL AND MAY NOT BE USED, REPRODUCED OR REVEALED TO OTHERS EXCEPT IN ACCORDANCE WITH CONTRACT OR OTHER WRITTEN CONSENT OF EMERSON PROCESS MANAGEMENT. ANY PERMITTED REPRODUCTION IN WHOLE OR IN PART, INCLUDING SHOP DRAWINGS MUST BEAR OR REFER TO THIS LEGEND.

CABLE ENTRIES	
CABLE GLAND SIZE	QUANTITY
M20	10

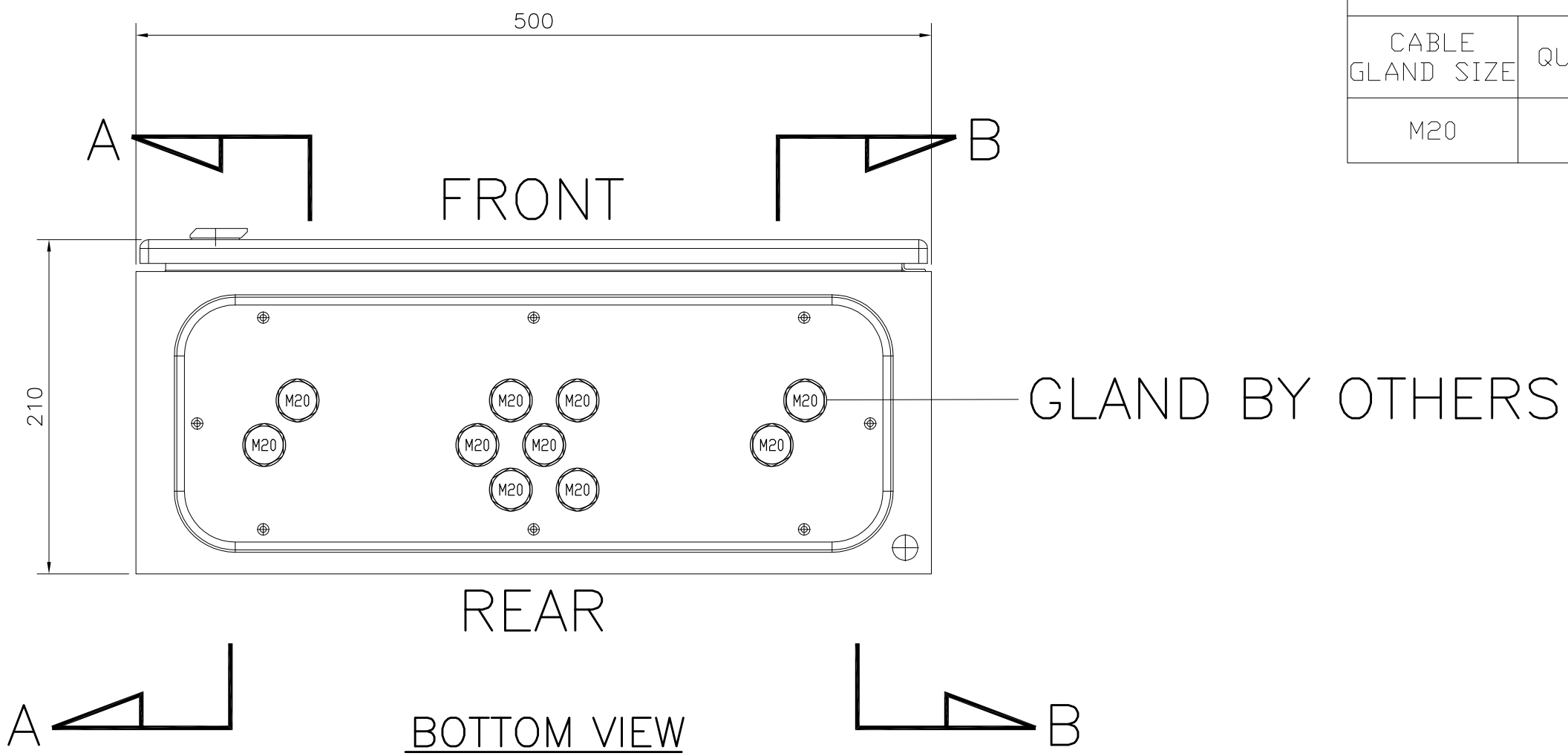

NETWORK CABINET – CR4–NET–001

wilmar	PERMIT STAMP AND PROFESSIONAL STAMP AFFIXED ABOVE SHALL APPLY ONLY TO REV(s)	EMERSON.	SCALE: NTS UNITS: mm (inch)	SIZE: A3 © 2018	EMERSON PROJECT NO.: 3258585 PROJECT TITLE: DCS SERANG PROJECT	TITLE: NETWORK CABINET CR4–NET–001 (BOTTOM VIEW)	EMERSON DRAWING NO.: 3258585–PSS–PASH–DWG–00010 CUSTOMER DRAWING NO.: –	SHEET NO: 022 REV.: 0

THIS DRAWING IS THE PROPERTY OF EMERSON PROCESS MANAGEMENT. INFORMATION AND KNOW HOW HEREIN ARE CONFIDENTIAL AND MAY NOT BE USED, REPRODUCED OR REVEALED TO OTHERS EXCEPT IN ACCORDANCE WITH CONTRACT OR OTHER WRITTEN CONSENT OF EMERSON PROCESS MANAGEMENT. ANY PERMITTED REPRODUCTION IN WHOLE OR IN PART, INCLUDING SHOP DRAWINGS MUST BEAR OR REFER TO THIS LEGEND.

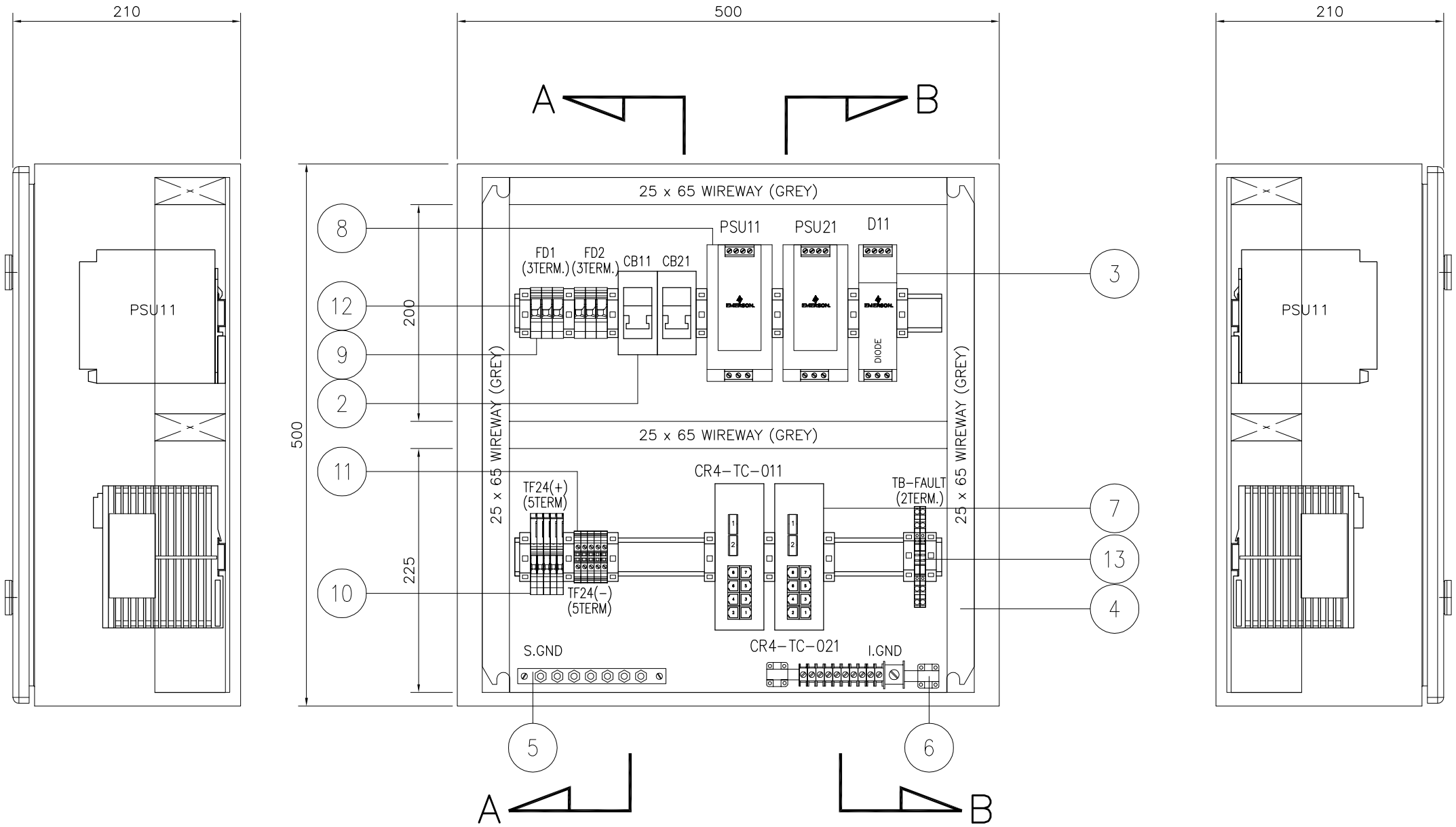

SECTION A–A
NETWORK CABINET – CR4–NET–001

FRONT VIEW
NETWORK CABINET – CR4–NET–001

SECTION B–B
NETWORK CABINET – CR4–NET–001

wilmar	PERMIT STAMP AND PROFESSIONAL STAMP AFFIXED ABOVE SHALL APPLY ONLY TO REV(s)	EMERSON	SCALE: NTS UNITS: mm (inch)	SIZE: A3 © 2018	EMERSON PROJECT NO.: 3258585 PROJECT TITLE: DCS SERANG PROJECT	TITLE: NETWORK CABINET CR4–NET–001 (FRONT VIEW, SECTION A–A & SECTION B–B)	EMERSON DRAWING NO.: 3258585–PSS–PASH–DWG–00010 CUSTOMER DRAWING NO.: –	SHEET NO: 023 REV.: 0

THIS DRAWING IS THE PROPERTY OF EMERSON PROCESS MANAGEMENT. INFORMATION AND KNOW HOW HEREIN ARE CONFIDENTIAL AND MAY NOT BE USED, REPRODUCED OR REVEALED TO OTHERS EXCEPT IN ACCORDANCE WITH CONTRACT OR OTHER WRITTEN CONSENT OF EMERSON PROCESS MANAGEMENT. ANY PERMITTED REPRODUCTION IN WHOLE OR IN PART, INCLUDING SHOP DRAWINGS MUST BEAR OR REFER TO THIS LEGEND.

BILL OF MATERIALS

ITEM NO.	DESCRIPTION	PART NUMBER	QTY.	MANUFACTURER
01	RITTAL CABINET (W500 X H500 X D210) FRONT ACCESS	AE1050.500	1 SET	RITTAL
02	AC MCB 2POLE (6A)	IK60N C6A	2 PCS	SCHNEIDER
03	DELTAV BULK POWER SUPPLY REDUNDANCY MODULE, 12 V DC TO 28 V DC, 20 A	VE5134	1 PC	EMERSON PROCESS
04	25 X 65 mm PVC WIREWAY (GREY)	–	1 LOT	CONTRACTOR
05	SAFETY GROUND BAR	–	1 LOT	CONTRACTOR
06	INSTRUMENT GROUND BAR	–	1 LOT	CONTRACTOR
07	ETHERNET SWITCH 8–PORT	ISF3010D	2 PCS	INHAND
08	DELTAV BULK POWER SUPPLY 100–240 V AC TO 24 V DC, 10A	VE5123	2 PCS	EMERSON PROCESS
09	2–COND THROUGH TERMINAL BLOCK, 10MM SQ	2010–1201	6 PCS	WAGO
10	FUSE DISCONNECT TB WITH FUSE BLOW INDICATOR, 24VDC, 4MM SQ	2004–1611/1000–0541	5 PCS	WAGO
11	2–COND THROUGH TERMINAL BLOCK, 4MM SQ	2004–1201	5 PCS	WAGO
12	END STOPPER	249–117	1 LOT	WAGO
13	DOUBLE DECK DISCONNECT TERMINAL BLOCK, 2.5MM SQ	2002–2671	2 PCS	WAGO
14				
15				
16				
17				
18				
19				
20				
21				
22				
23				
24				
25				
26				
27				
28				

wilmar

PERMIT STAMP AND PROFESSIONAL STAMP AFFIXED ABOVE SHALL APPLY ONLY TO REV(s)

EMERSON.

SCALE: NTS | SIZE: A3
UNITS: mm (inch) | © 2018

EMERSON PROJECT NO.: 3258585
PROJECT TITLE: DCS SERANG PROJECT

TITLE: NETWORK CABINET CR4–NET–001 BILL OF MATERIAL

EMERSON DRAWING NO.: 3258585–PSS–PASH–DWG–00010
CUSTOMER DRAWING NO.: –

SHEET NO: 024
REV.: 0

THIS DRAWING IS THE PROPERTY OF EMERSON PROCESS MANAGEMENT. INFORMATION AND KNOW HOW HEREIN ARE CONFIDENTIAL AND MAY NOT BE USED, REPRODUCED OR REVEALED TO OTHERS EXCEPT IN ACCORDANCE WITH CONTRACT OR OTHER WRITTEN CONSENT OF EMERSON PROCESS MANAGEMENT. ANY PERMITTED REPRODUCTION IN WHOLE OR IN PART, INCLUDING SHOP DRAWINGS MUST BEAR OR REFER TO THIS LEGEND.

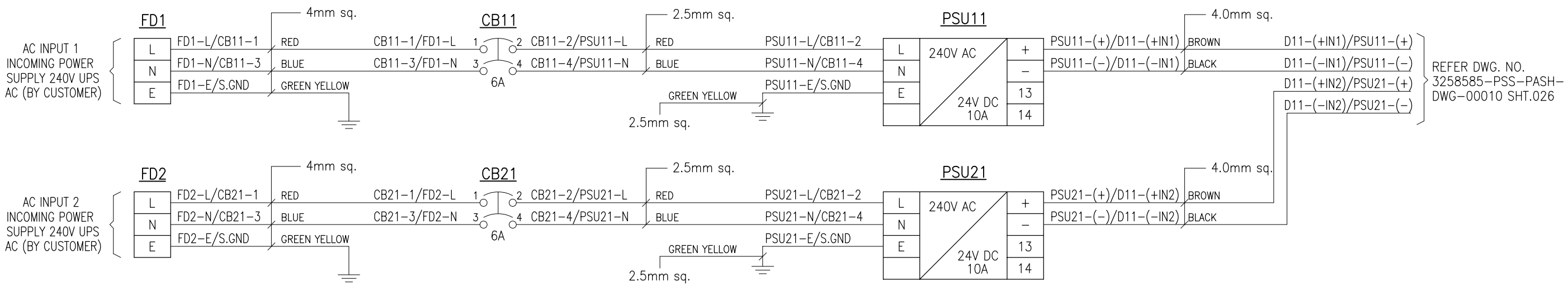

LEGEND:

FROM TO

FD1-L/ISL1-1

TERMINAL & POINT NO.

TERMINAL & POINT NO.

wilmar	PERMIT STAMP AND PROFESSIONAL STAMP AFFIXED ABOVE SHALL APPLY ONLY TO REV(s)	EMERSON	SCALE: NTS UNITS: mm (inch)	SIZE: A3 © 2018	EMERSON PROJECT NO.: 3258585 PROJECT TITLE: DCS SERANG PROJECT	TITLE: NETWORK CABINET CR4-NET-001 240VAC UPS POWER DISTRIBUTION DIAGRAM	EMERSON DRAWING NO.: 3258585-PSS-PASH-DWG-00010 CUSTOMER DRAWING NO.: –	SHEET NO: 025 REV.: 0

THIS DRAWING IS THE PROPERTY OF EMERSON PROCESS MANAGEMENT. INFORMATION AND KNOW HOW HEREIN ARE CONFIDENTIAL AND MAY NOT BE USED, REPRODUCED OR REVEALED TO OTHERS EXCEPT IN ACCORDANCE WITH CONTRACT OR OTHER WRITTEN CONSENT OF EMERSON PROCESS MANAGEMENT. ANY PERMITTED REPRODUCTION IN WHOLE OR IN PART, INCLUDING SHOP DRAWINGS MUST BEAR OR REFER TO THIS LEGEND.

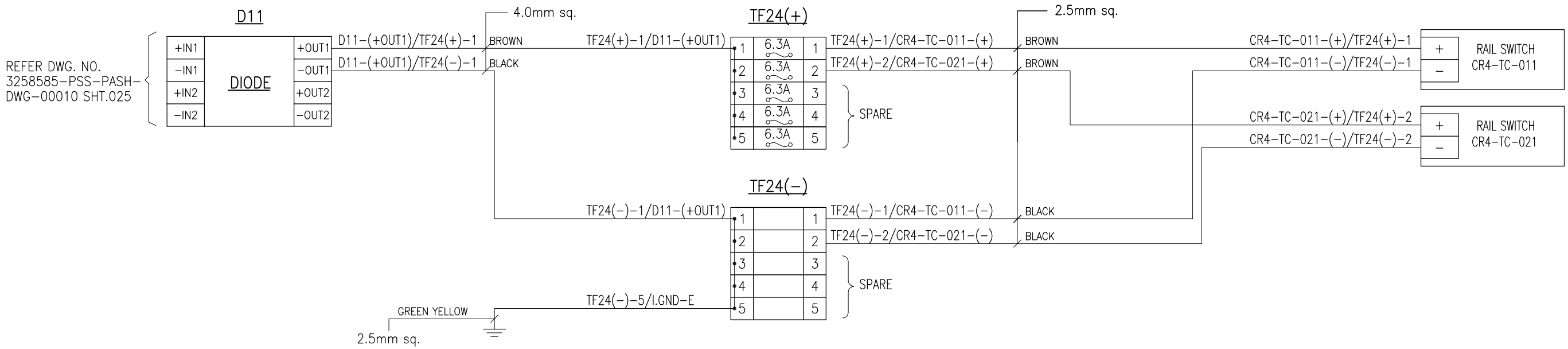

LEGEND:

FROM TO

FD1-L/ISL1-1

TERMINAL & POINT NO.

TERMINAL & POINT NO.

wilmar	PERMIT STAMP AND PROFESSIONAL STAMP AFFIXED ABOVE SHALL APPLY ONLY TO REV(s)	EMERSON.	SCALE: NTS / SIZE: A3	EMERSON PROJECT NO.: 3258585	TITLE: NETWORK CABINET CR4-NET-001 24VDC POWER DISTRIBUTION DIAGRAM	EMERSON DRAWING NO.: 3258585-PSS-PASH-DWG-00010	SHEET NO: 026
			UNITS: mm (inch) / © 2018	PROJECT TITLE: DCS SERANG PROJECT		CUSTOMER DRAWING NO.: –	REV.: 0

THIS DRAWING IS THE PROPERTY OF EMERSON PROCESS MANAGEMENT. INFORMATION AND KNOW HOW HEREIN ARE CONFIDENTIAL AND MAY NOT BE USED, REPRODUCED OR REVEALED TO OTHERS EXCEPT IN ACCORDANCE WITH CONTRACT OR OTHER WRITTEN CONSENT OF EMERSON PROCESS MANAGEMENT. ANY PERMITTED REPRODUCTION IN WHOLE OR IN PART, INCLUDING SHOP DRAWINGS MUST BEAR OR REFER TO THIS LEGEND.

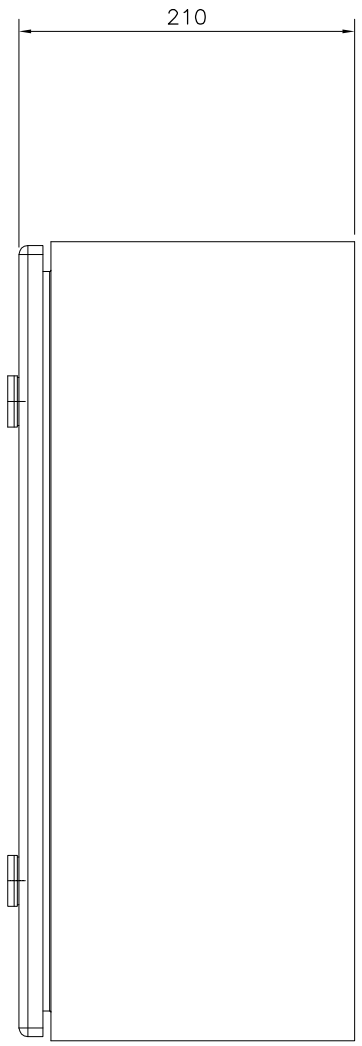

LEFT SIDE VIEW

NETWORK CABINET – CR5–NET–001

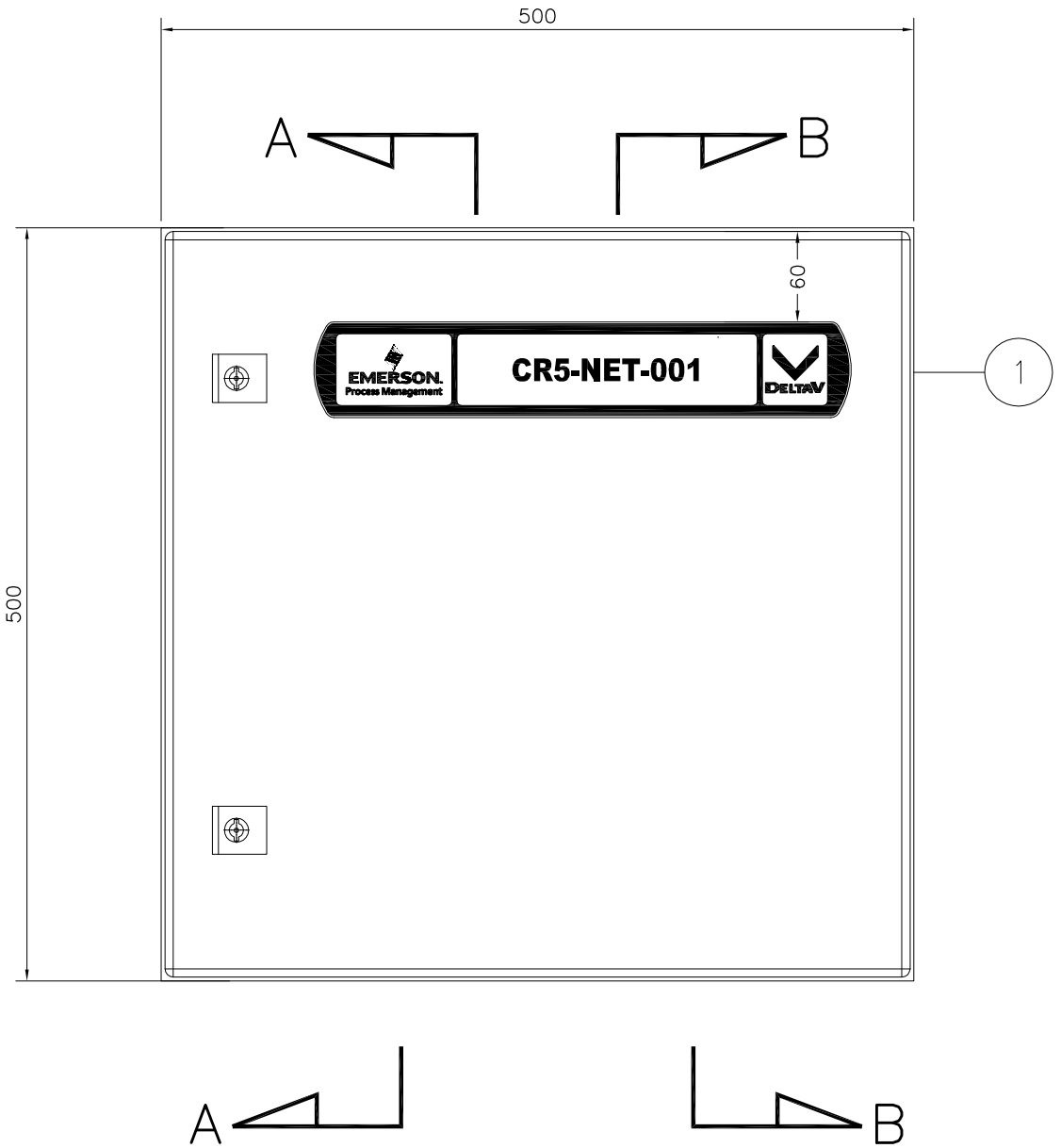

FRONT DOOR VIEW

NETWORK CABINET – CR5–NET–001

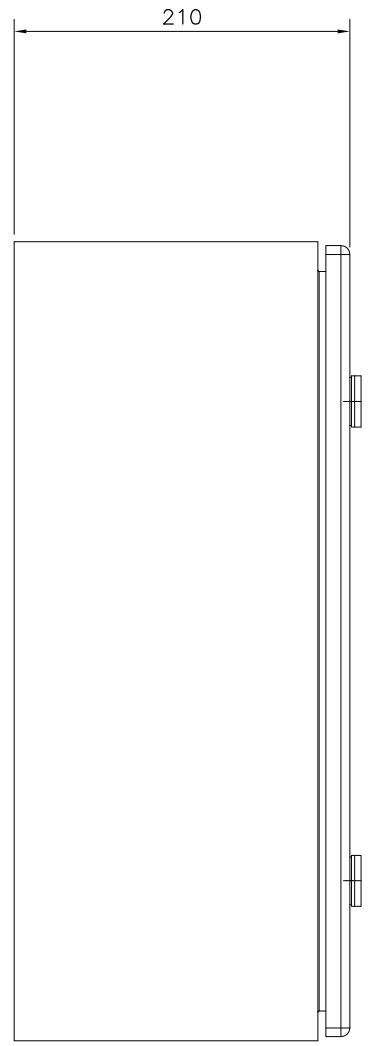

RIGHT SIDE VIEW

NETWORK CABINET – CR5–NET–001

NOTE: NETWORK CABINET FOR THIN CLIENT
IN CONTROL ROOMS

wilmar	PERMIT STAMP AND PROFESSIONAL STAMP AFFIXED ABOVE SHALL APPLY ONLY TO REV(s)	EMERSON.	SCALE: NTS	SIZE: A3	EMERSON PROJECT NO.: 3258585 PROJECT TITLE: DCS SERANG PROJECT	TITLE: NETWORK CABINET CR5–NET–001 (FRONT DOOR VIEW, RIGHT SIDE & LEFT SIDE VIEW)	EMERSON DRAWING NO.: 3258585–PSS–PASH–DWG–00010	SHEET NO: 027
			UNITS: mm (inch)	© 2018			CUSTOMER DRAWING NO.: –	REV.: 0

THIS DRAWING IS THE PROPERTY OF EMERSON PROCESS MANAGEMENT. INFORMATION AND KNOW HOW HEREIN ARE CONFIDENTIAL AND MAY NOT BE USED, REPRODUCED OR REVEALED TO OTHERS EXCEPT IN ACCORDANCE WITH CONTRACT OR OTHER WRITTEN CONSENT OF EMERSON PROCESS MANAGEMENT. ANY PERMITTED REPRODUCTION IN WHOLE OR IN PART, INCLUDING SHOP DRAWINGS MUST BEAR OR REFER TO THIS LEGEND.

CABLE ENTRIES	
CABLE GLAND SIZE	QUANTITY
M20	10

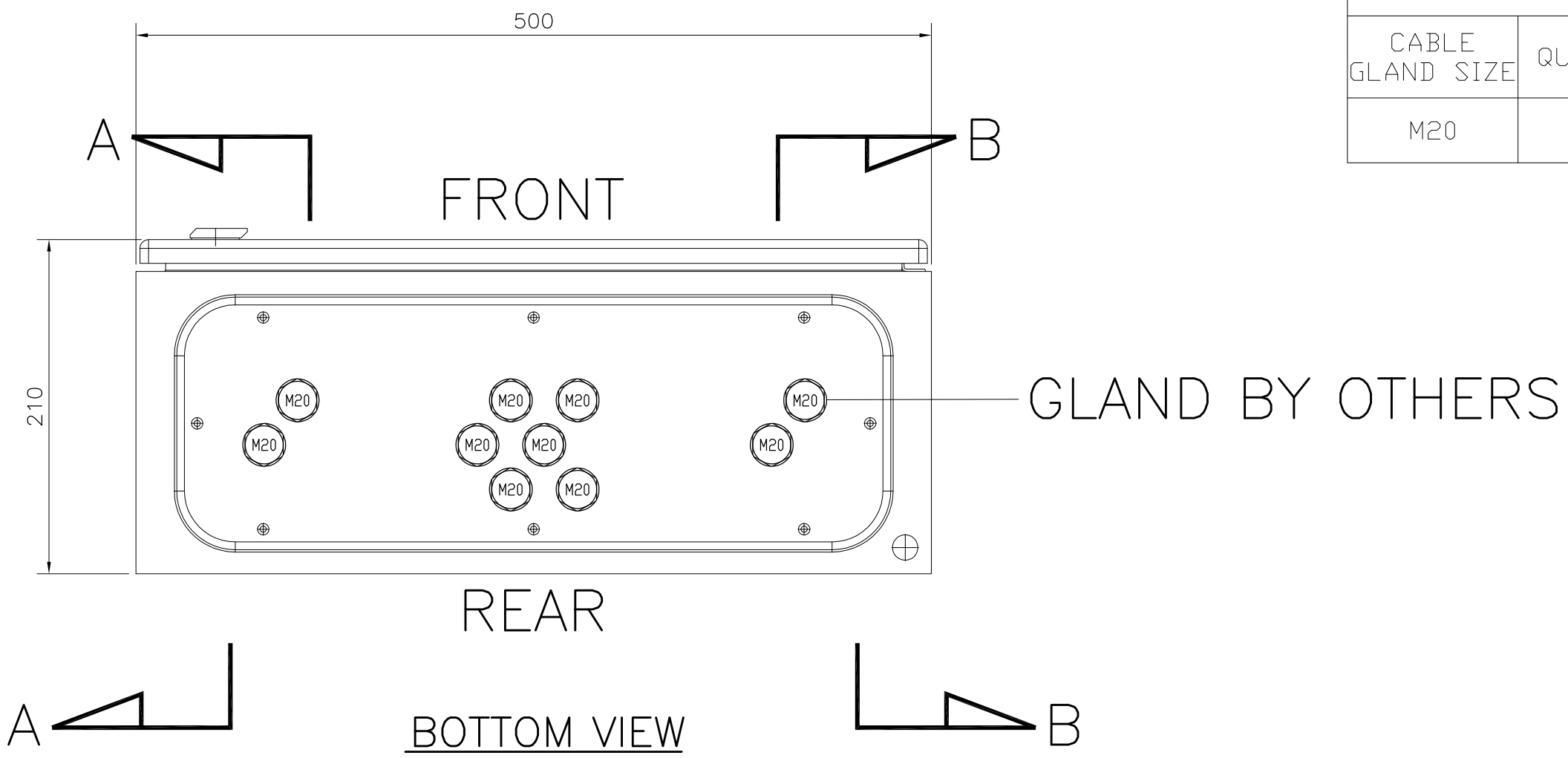

NETWORK CABINET – CR5–NET–001

wilmar	PERMIT STAMP AND PROFESSIONAL STAMP AFFIXED ABOVE SHALL APPLY ONLY TO REV(s)	EMERSON.	SCALE: NTS	SIZE: A3	EMERSON PROJECT NO.: 3258585 PROJECT TITLE: DCS SERANG PROJECT	TITLE: NETWORK CABINET CR5–NET–001 (BOTTOM VIEW)	EMERSON DRAWING NO.: 3258585–PSS–PASH–DWG–00010	SHEET NO: 028
			UNITS: mm (inch)	© 2018			CUSTOMER DRAWING NO.: –	REV.: 0

THIS DRAWING IS THE PROPERTY OF EMERSON PROCESS MANAGEMENT. INFORMATION AND KNOW HOW HEREIN ARE CONFIDENTIAL AND MAY NOT BE USED, REPRODUCED OR REVEALED TO OTHERS EXCEPT IN ACCORDANCE WITH CONTRACT OR OTHER WRITTEN CONSENT OF EMERSON PROCESS MANAGEMENT. ANY PERMITTED REPRODUCTION IN WHOLE OR IN PART, INCLUDING SHOP DRAWINGS MUST BEAR OR REFER TO THIS LEGEND.

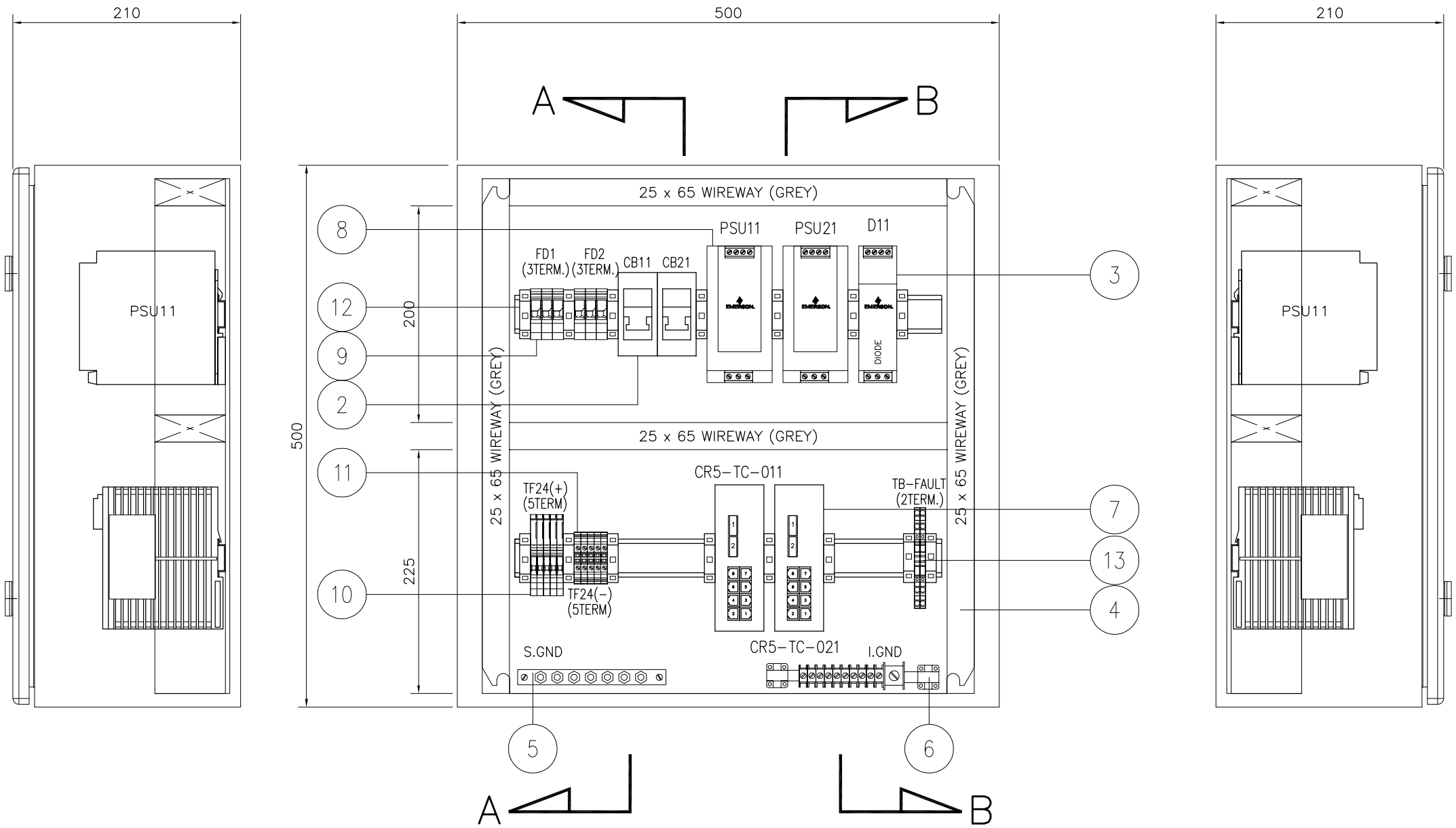

SECTION A–A
NETWORK CABINET – CR5–NET–001

FRONT VIEW
NETWORK CABINET – CR5–NET–001

SECTION B–B
NETWORK CABINET – CR5–NET–001

wilmar	PERMIT STAMP AND PROFESSIONAL STAMP AFFIXED ABOVE SHALL APPLY ONLY TO REV(s)	EMERSON	SCALE: NTS	SIZE: A3	EMERSON PROJECT NO.: 3258585 PROJECT TITLE: DCS SERANG PROJECT	TITLE: NETWORK CABINET CR5–NET–001 (FRONT VIEW, SECTION A–A & SECTION B–B)	EMERSON DRAWING NO.: 3258585–PSS–PASH–DWG–00010	SHEET NO: 029
			UNITS: mm (inch)	© 2018			CUSTOMER DRAWING NO.: –	REV.: 0

THIS DRAWING IS THE PROPERTY OF EMERSON PROCESS MANAGEMENT. INFORMATION AND KNOW HOW HEREIN ARE CONFIDENTIAL AND MAY NOT BE USED, REPRODUCED OR REVEALED TO OTHERS EXCEPT IN ACCORDANCE WITH CONTRACT OR OTHER WRITTEN CONSENT OF EMERSON PROCESS MANAGEMENT. ANY PERMITTED REPRODUCTION IN WHOLE OR IN PART, INCLUDING SHOP DRAWINGS MUST BEAR OR REFER TO THIS LEGEND.

BILL OF MATERIALS

ITEM NO.	DESCRIPTION	PART NUMBER	QTY.	MANUFACTURER
01	RITTAL CABINET (W500 X H500 X D210) FRONT ACCESS	AE1050.500	1 SET	RITTAL
02	AC MCB 2POLE (6A)	IK60N C6A	2 PCS	SCHNEIDER
03	DELTAV BULK POWER SUPPLY REDUNDANCY MODULE, 12 V DC TO 28 V DC, 20 A	VE5134	1 PC	EMERSON PROCESS
04	25 X 65 mm PVC WIREWAY (GREY)	–	1 LOT	CONTRACTOR
05	SAFETY GROUND BAR	–	1 LOT	CONTRACTOR
06	INSTRUMENT GROUND BAR	–	1 LOT	CONTRACTOR
07	ETHERNET SWITCH 8–PORT	ISF3010D	2 PCS	INHAND
08	DELTAV BULK POWER SUPPLY 100–240 V AC TO 24 V DC, 10A	VE5123	2 PCS	EMERSON PROCESS
09	2–COND THROUGH TERMINAL BLOCK, 10MM SQ	2010–1201	6 PCS	WAGO
10	FUSE DISCONNECT TB WITH FUSE BLOW INDICATOR, 24VDC, 4MM SQ	2004–1611/1000–0541	5 PCS	WAGO
11	2–COND THROUGH TERMINAL BLOCK, 4MM SQ	2004–1201	5 PCS	WAGO
12	END STOPPER	249–117	1 LOT	WAGO
13	DOUBLE DECK DISCONNECT TERMINAL BLOCK, 2.5MM SQ	2002–2671	2 PCS	WAGO
14				
15				
16				
17				
18				
19				
20				
21				
22				
23				
24				
25				
26				
27				
28				

wilmar

PERMIT STAMP AND PROFESSIONAL STAMP AFFIXED ABOVE SHALL APPLY ONLY TO REV(s)

EMERSON.

SCALE: NTS | SIZE: A3
UNITS: mm (inch) | © 2018

EMERSON PROJECT NO.: 3258585
PROJECT TITLE: DCS SERANG PROJECT

TITLE: NETWORK CABINET CR5–NET–001 BILL OF MATERIAL

EMERSON DRAWING NO.: 3258585–PSS–PASH–DWG–00010
CUSTOMER DRAWING NO.: –

SHEET NO: 030
REV.: 0

THIS DRAWING IS THE PROPERTY OF EMERSON PROCESS MANAGEMENT. INFORMATION AND KNOW HOW HEREIN ARE CONFIDENTIAL AND MAY NOT BE USED, REPRODUCED OR REVEALED TO OTHERS EXCEPT IN ACCORDANCE WITH CONTRACT OR OTHER WRITTEN CONSENT OF EMERSON PROCESS MANAGEMENT. ANY PERMITTED REPRODUCTION IN WHOLE OR IN PART, INCLUDING SHOP DRAWINGS MUST BEAR OR REFER TO THIS LEGEND.

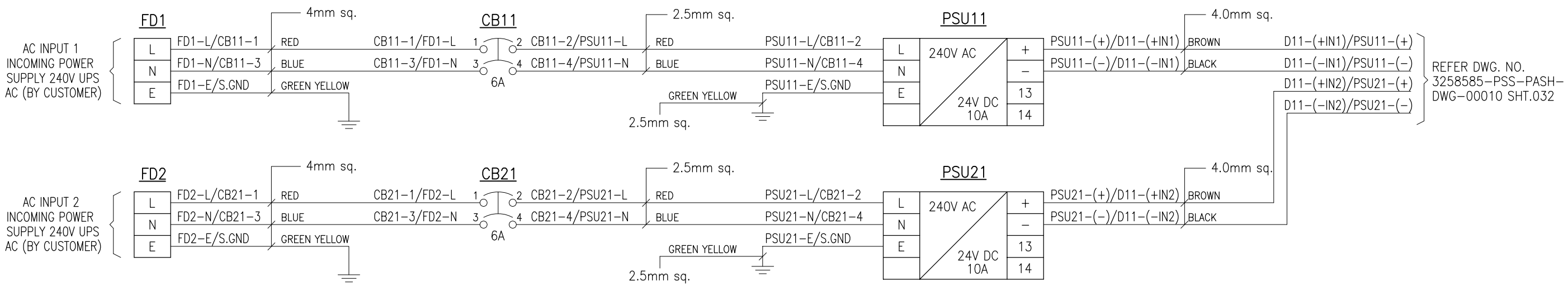

LEGEND:

FROM TO

FD1-L/ISL1-1

TERMINAL & POINT NO.

TERMINAL & POINT NO.

wilmar	PERMIT STAMP AND PROFESSIONAL STAMP AFFIXED ABOVE SHALL APPLY ONLY TO REV(s)	EMERSON	SCALE: NTS UNITS: mm (inch)	SIZE: A3 © 2018	EMERSON PROJECT NO.: 3258585 PROJECT TITLE: DCS SERANG PROJECT	TITLE: NETWORK CABINET CR5-NET-001 240VAC UPS POWER DISTRIBUTION DIAGRAM	EMERSON DRAWING NO.: 3258585-PSS-PASH-DWG-00010 CUSTOMER DRAWING NO.: –	SHEET NO: 031 REV.: 0

THIS DRAWING IS THE PROPERTY OF EMERSON PROCESS MANAGEMENT. INFORMATION AND KNOW HOW HEREIN ARE CONFIDENTIAL AND MAY NOT BE USED, REPRODUCED OR REVEALED TO OTHERS EXCEPT IN ACCORDANCE WITH CONTRACT OR OTHER WRITTEN CONSENT OF EMERSON PROCESS MANAGEMENT. ANY PERMITTED REPRODUCTION IN WHOLE OR IN PART, INCLUDING SHOP DRAWINGS MUST BEAR OR REFER TO THIS LEGEND.

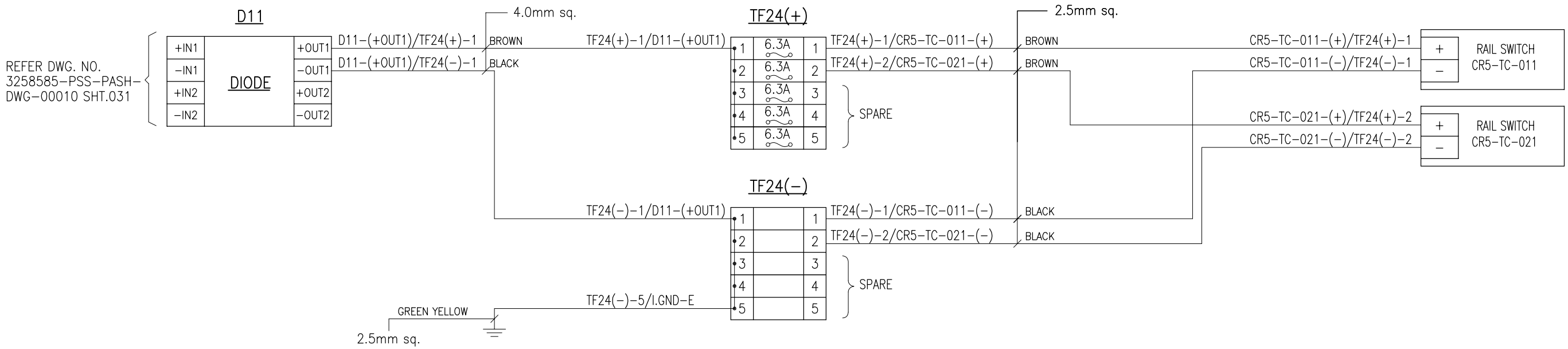

LEGEND:

FROM TO

FD1-L/ISL1-1

TERMINAL & POINT NO.

TERMINAL & POINT NO.

wilmar	PERMIT STAMP AND PROFESSIONAL STAMP AFFIXED ABOVE SHALL APPLY ONLY TO REV(s)	EMERSON.	SCALE: NTS / SIZE: A3	EMERSON PROJECT NO.: 3258585	TITLE: NETWORK CABINET CR5-NET-001 24VDC POWER DISTRIBUTION DIAGRAM	EMERSON DRAWING NO.: 3258585-PSS-PASH-DWG-00010	SHEET NO: 032
			UNITS: mm (inch) / © 2018	PROJECT TITLE: DCS SERANG PROJECT		CUSTOMER DRAWING NO.: –	REV.: 0

THIS DRAWING IS THE PROPERTY OF EMERSON PROCESS MANAGEMENT. INFORMATION AND KNOW HOW HEREIN ARE CONFIDENTIAL AND MAY NOT BE USED, REPRODUCED OR REVEALED TO OTHERS EXCEPT IN ACCORDANCE WITH CONTRACT OR OTHER WRITTEN CONSENT OF EMERSON PROCESS MANAGEMENT. ANY PERMITTED REPRODUCTION IN WHOLE OR IN PART, INCLUDING SHOP DRAWINGS MUST BEAR OR REFER TO THIS LEGEND.

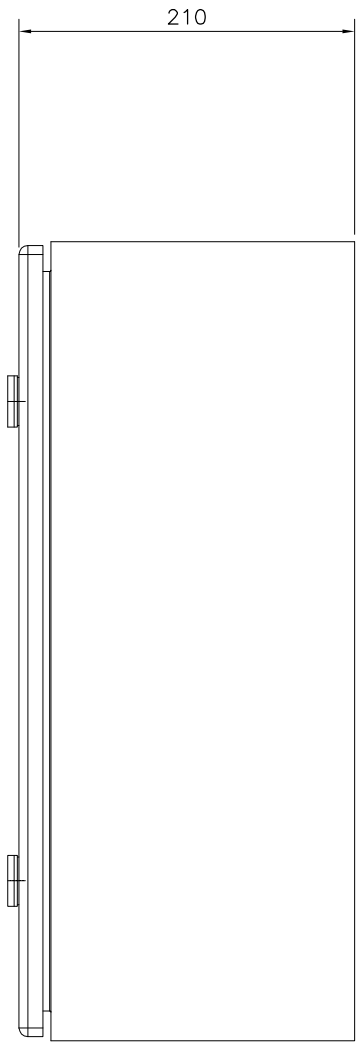

LEFT SIDE VIEW

NETWORK CABINET – CR6–NET–001

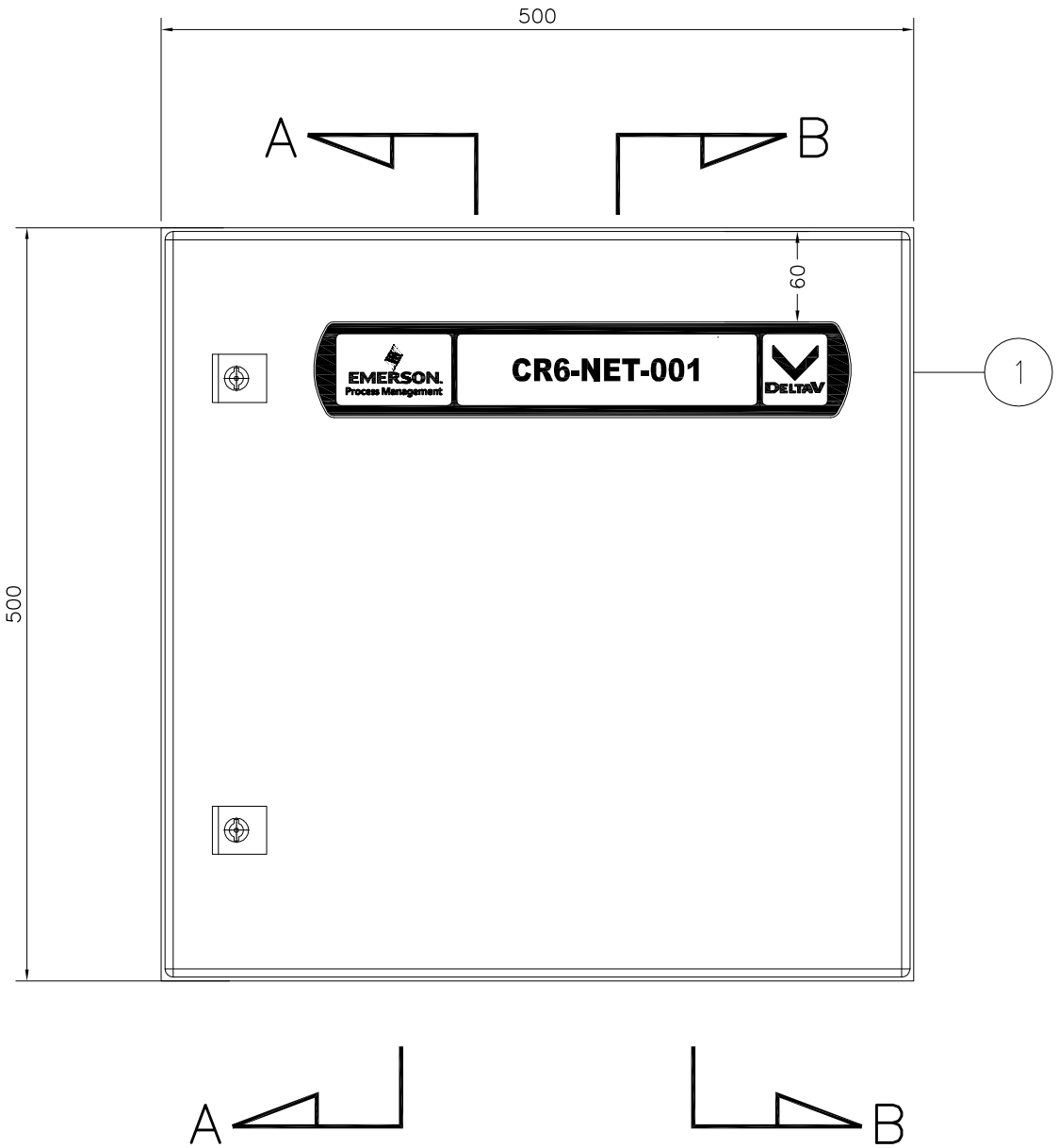

FRONT DOOR VIEW

NETWORK CABINET – CR6–NET–001

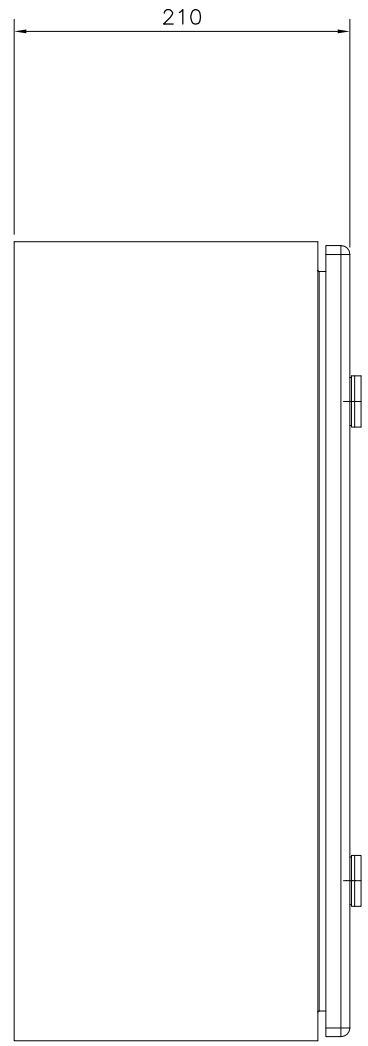

RIGHT SIDE VIEW

NETWORK CABINET – CR6–NET–001

NOTE: NETWORK CABINET FOR THIN CLIENT
IN CONTROL ROOMS

wilmar	PERMIT STAMP AND PROFESSIONAL STAMP AFFIXED ABOVE SHALL APPLY ONLY TO REV(s)	EMERSON.	SCALE: NTS	SIZE: A3	EMERSON PROJECT NO.: 3258585 PROJECT TITLE: DCS SERANG PROJECT	TITLE: NETWORK CABINET CR6–NET–001 (FRONT DOOR VIEW, RIGHT SIDE & LEFT SIDE VIEW)	EMERSON DRAWING NO.: 3258585–PSS–PASH–DWG–00010	SHEET NO: 033
			UNITS: mm (inch)	© 2018			CUSTOMER DRAWING NO.: –	REV.: 0

THIS DRAWING IS THE PROPERTY OF EMERSON PROCESS MANAGEMENT. INFORMATION AND KNOW HOW HEREIN ARE CONFIDENTIAL AND MAY NOT BE USED, REPRODUCED OR REVEALED TO OTHERS EXCEPT IN ACCORDANCE WITH CONTRACT OR OTHER WRITTEN CONSENT OF EMERSON PROCESS MANAGEMENT. ANY PERMITTED REPRODUCTION IN WHOLE OR IN PART, INCLUDING SHOP DRAWINGS MUST BEAR OR REFER TO THIS LEGEND.

CABLE ENTRIES	
CABLE GLAND SIZE	QUANTITY
M20	10

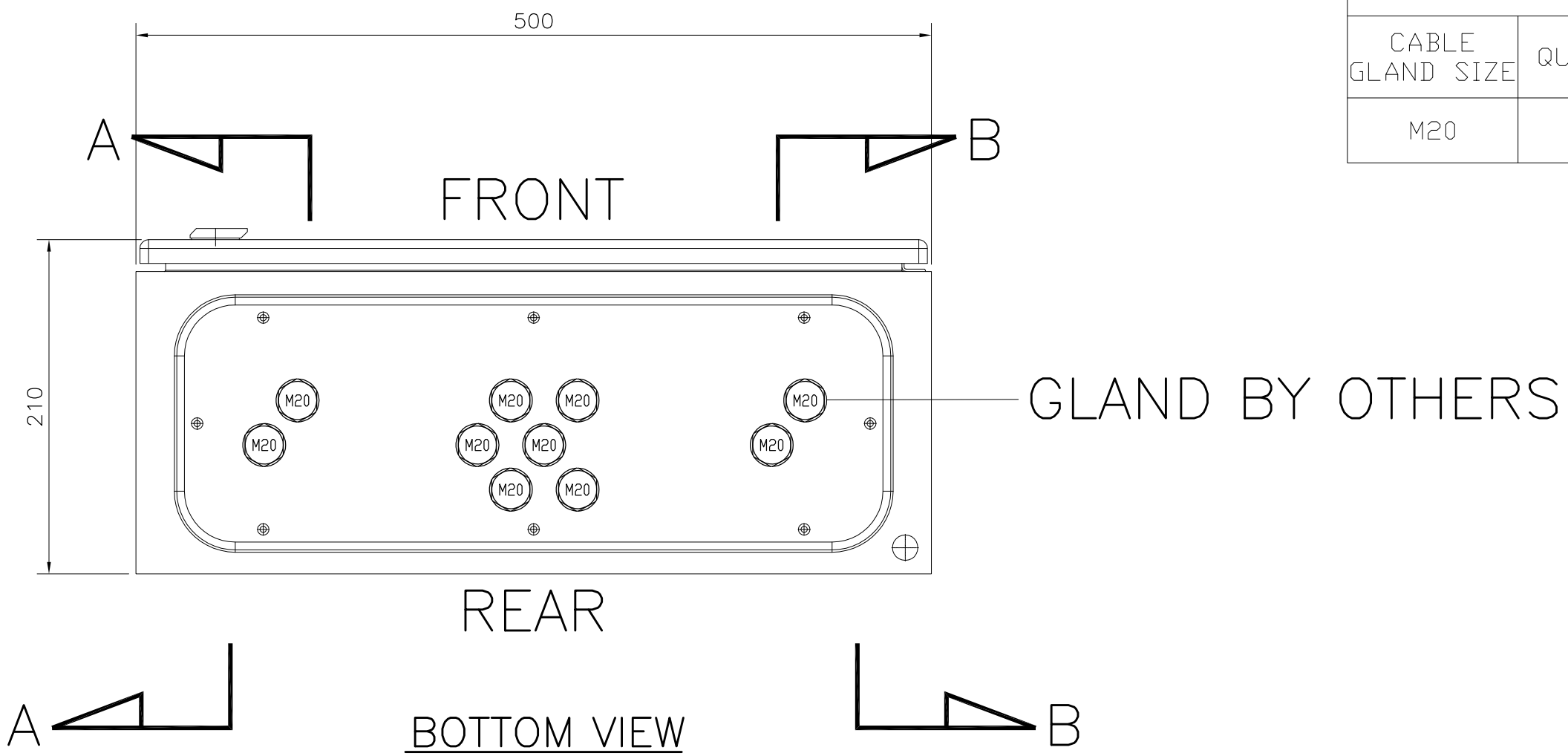

NETWORK CABINET – CR6–NET–001

wilmar	PERMIT STAMP AND PROFESSIONAL STAMP AFFIXED ABOVE SHALL APPLY ONLY TO REV(s)	EMERSON.	SCALE: NTS UNITS: mm (inch)	SIZE: A3 © 2018	EMERSON PROJECT NO.: 3258585 PROJECT TITLE: DCS SERANG PROJECT	TITLE: NETWORK CABINET CR6–NET–001 (BOTTOM VIEW)	EMERSON DRAWING NO.: 3258585–PSS–PASH–DWG–00010 CUSTOMER DRAWING NO.: –	SHEET NO: 034 REV.: 0

THIS DRAWING IS THE PROPERTY OF EMERSON PROCESS MANAGEMENT. INFORMATION AND KNOW HOW HEREIN ARE CONFIDENTIAL AND MAY NOT BE USED, REPRODUCED OR REVEALED TO OTHERS EXCEPT IN ACCORDANCE WITH CONTRACT OR OTHER WRITTEN CONSENT OF EMERSON PROCESS MANAGEMENT. ANY PERMITTED REPRODUCTION IN WHOLE OR IN PART, INCLUDING SHOP DRAWINGS MUST BEAR OR REFER TO THIS LEGEND.

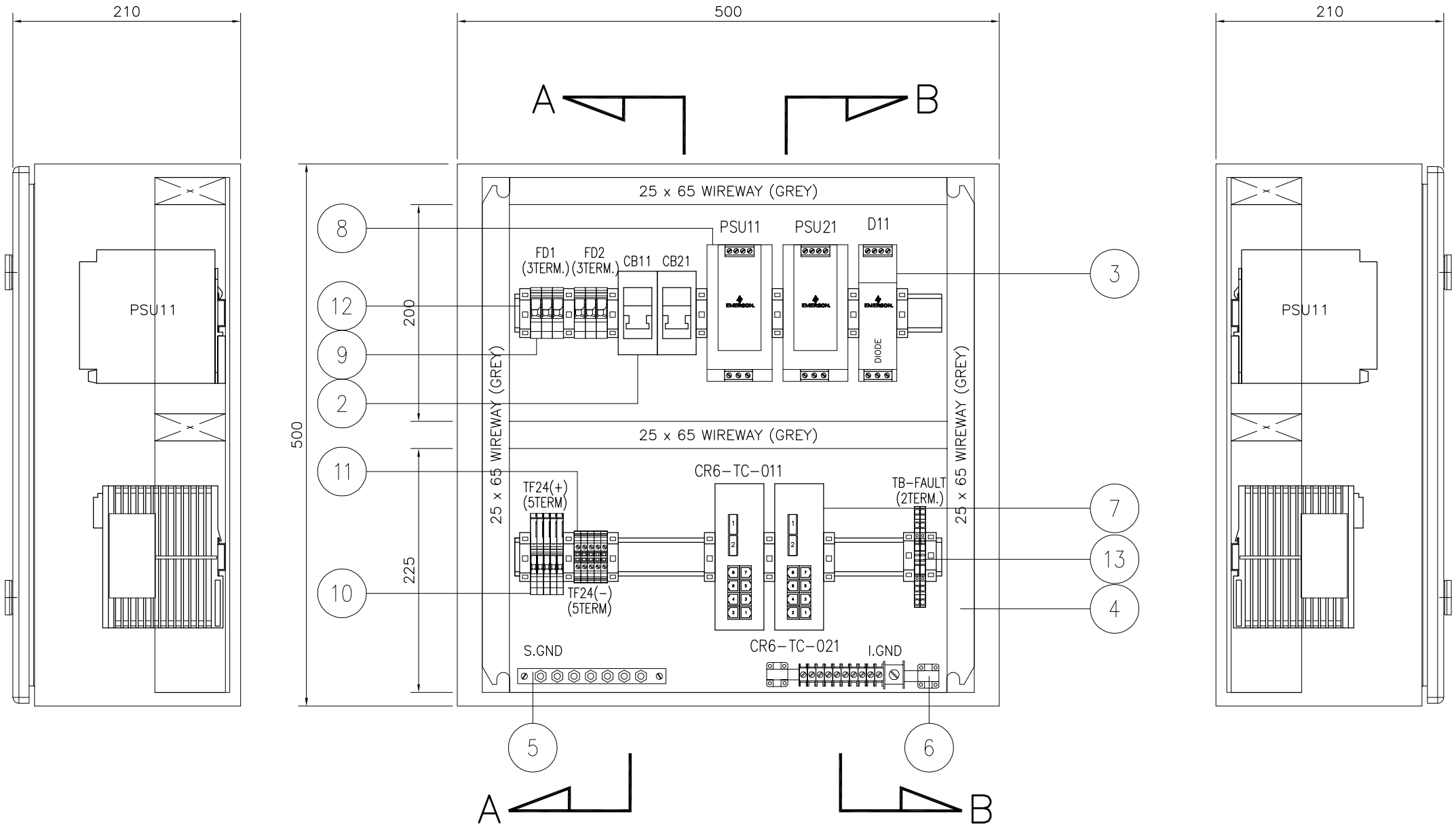

SECTION A–A
NETWORK CABINET – CR6–NET–001

FRONT VIEW
NETWORK CABINET – CR6–NET–001

SECTION B–B
NETWORK CABINET – CR6–NET–001

wilmar	PERMIT STAMP AND PROFESSIONAL STAMP AFFIXED ABOVE SHALL APPLY ONLY TO REV(s)	EMERSON	SCALE: NTS	SIZE: A3	EMERSON PROJECT NO.: 3258585 PROJECT TITLE: DCS SERANG PROJECT	TITLE: NETWORK CABINET CR6-NET-001 (FRONT VIEW, SECTION A-A & SECTION B-B)	EMERSON DRAWING NO.: 3258585-PSS-PASH-DWG-00010	SHEET NO: 035
			UNITS: mm (inch)	© 2018			CUSTOMER DRAWING NO.: –	REV.: 0

THIS DRAWING IS THE PROPERTY OF EMERSON PROCESS MANAGEMENT. INFORMATION AND KNOW HOW HEREIN ARE CONFIDENTIAL AND MAY NOT BE USED, REPRODUCED OR REVEALED TO OTHERS EXCEPT IN ACCORDANCE WITH CONTRACT OR OTHER WRITTEN CONSENT OF EMERSON PROCESS MANAGEMENT. ANY PERMITTED REPRODUCTION IN WHOLE OR IN PART, INCLUDING SHOP DRAWINGS MUST BEAR OR REFER TO THIS LEGEND.

BILL OF MATERIALS

ITEM NO.	DESCRIPTION	PART NUMBER	QTY.	MANUFACTURER
01	RITTAL CABINET (W500 X H500 X D210) FRONT ACCESS	AE1050.500	1 SET	RITTAL
02	AC MCB 2POLE (6A)	IK60N C6A	2 PCS	SCHNEIDER
03	DELTAV BULK POWER SUPPLY REDUNDANCY MODULE, 12 V DC TO 28 V DC, 20 A	VE5134	1 PC	EMERSON PROCESS
04	25 X 65 mm PVC WIREWAY (GREY)	–	1 LOT	CONTRACTOR
05	SAFETY GROUND BAR	–	1 LOT	CONTRACTOR
06	INSTRUMENT GROUND BAR	–	1 LOT	CONTRACTOR
07	ETHERNET SWITCH 8–PORT	ISF3010D	2 PCS	INHAND
08	DELTAV BULK POWER SUPPLY 100–240 V AC TO 24 V DC, 10A	VE5123	2 PCS	EMERSON PROCESS
09	2–COND THROUGH TERMINAL BLOCK, 10MM SQ	2010–1201	6 PCS	WAGO
10	FUSE DISCONNECT TB WITH FUSE BLOW INDICATOR, 24VDC, 4MM SQ	2004–1611/1000–0541	5 PCS	WAGO
11	2–COND THROUGH TERMINAL BLOCK, 4MM SQ	2004–1201	5 PCS	WAGO
12	END STOPPER	249–117	1 LOT	WAGO
13	DOUBLE DECK DISCONNECT TERMINAL BLOCK, 2.5MM SQ	2002–2671	2 PCS	WAGO
14				
15				
16				
17				
18				
19				
20				
21				
22				
23				
24				
25				
26				
27				
28				

wilmar

PERMIT STAMP AND PROFESSIONAL STAMP AFFIXED ABOVE SHALL APPLY ONLY TO REV(s)

EMERSON.

SCALE: NTS | SIZE: A3
UNITS: mm (inch) | © 2018

EMERSON PROJECT NO.: 3258585
PROJECT TITLE: DCS SERANG PROJECT

TITLE: NETWORK CABINET CR6–NET–001 BILL OF MATERIAL

EMERSON DRAWING NO.: 3258585–PSS–PASH–DWG–00010
CUSTOMER DRAWING NO.: –

SHEET NO: 036
REV.: 0

THIS DRAWING IS THE PROPERTY OF EMERSON PROCESS MANAGEMENT. INFORMATION AND KNOW HOW HEREIN ARE CONFIDENTIAL AND MAY NOT BE USED, REPRODUCED OR REVEALED TO OTHERS EXCEPT IN ACCORDANCE WITH CONTRACT OR OTHER WRITTEN CONSENT OF EMERSON PROCESS MANAGEMENT. ANY PERMITTED REPRODUCTION IN WHOLE OR IN PART, INCLUDING SHOP DRAWINGS MUST BEAR OR REFER TO THIS LEGEND.

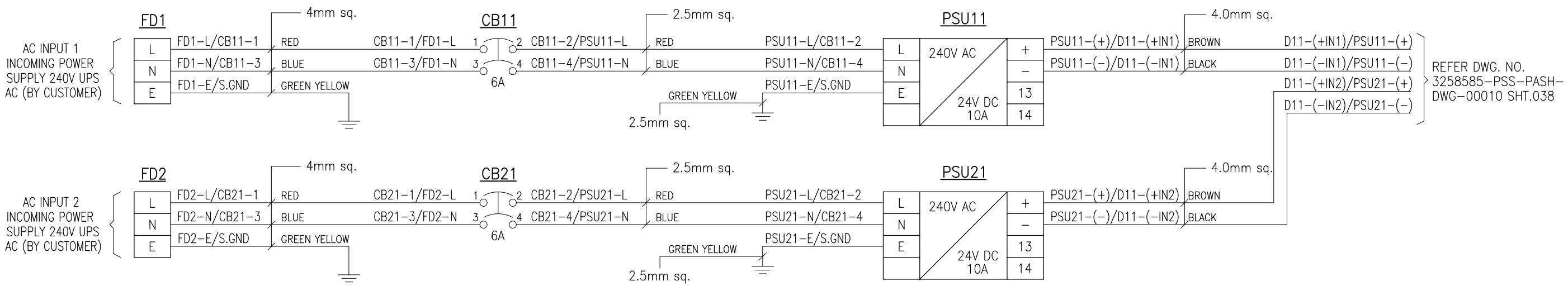

LEGEND:

FROM TO

FD1-L/ISL1-1

TERMINAL & POINT NO.

TERMINAL & POINT NO.

wilmar	PERMIT STAMP AND PROFESSIONAL STAMP AFFIXED ABOVE SHALL APPLY ONLY TO REV(s)	EMERSON	SCALE: NTS UNITS: mm (inch)	SIZE: A3 © 2018	EMERSON PROJECT NO.: 3258585 PROJECT TITLE: DCS SERANG PROJECT	TITLE: NETWORK CABINET CR6-NET-001 240VAC UPS POWER DISTRIBUTION DIAGRAM	EMERSON DRAWING NO.: 3258585-PSS-PASH-DWG-00010 CUSTOMER DRAWING NO.: –	SHEET NO: 037 REV.: 0

THIS DRAWING IS THE PROPERTY OF EMERSON PROCESS MANAGEMENT. INFORMATION AND KNOW HOW HEREIN ARE CONFIDENTIAL AND MAY NOT BE USED, REPRODUCED OR REVEALED TO OTHERS EXCEPT IN ACCORDANCE WITH CONTRACT OR OTHER WRITTEN CONSENT OF EMERSON PROCESS MANAGEMENT. ANY PERMITTED REPRODUCTION IN WHOLE OR IN PART, INCLUDING SHOP DRAWINGS MUST BEAR OR REFER TO THIS LEGEND.

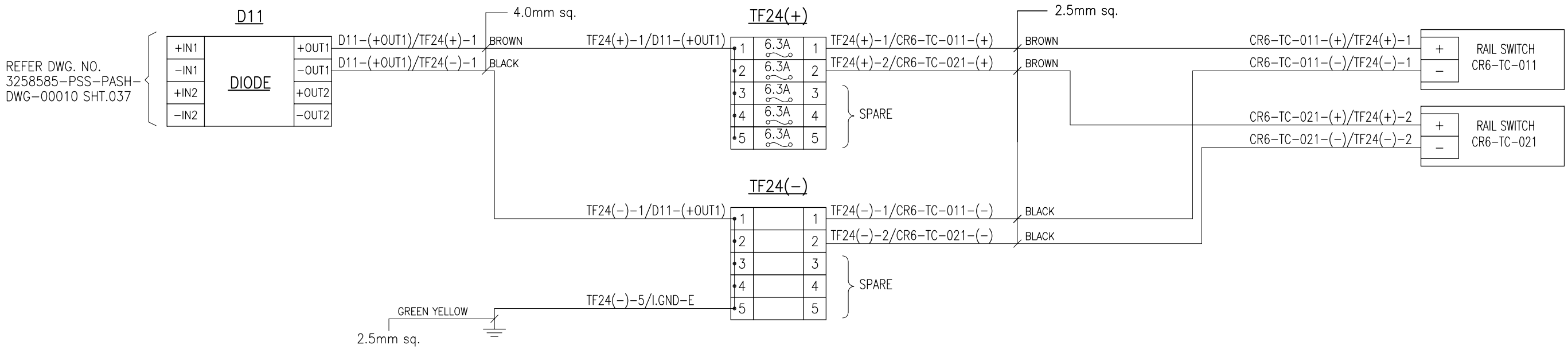

LEGEND:

FROM TO

FD1-L/ISL1-1

TERMINAL & POINT NO.

TERMINAL & POINT NO.

wilmar	PERMIT STAMP AND PROFESSIONAL STAMP AFFIXED ABOVE SHALL APPLY ONLY TO REV(s)	EMERSON.	SCALE: NTS / SIZE: A3	EMERSON PROJECT NO.: 3258585	TITLE: NETWORK CABINET CR6-NET-001 24VDC POWER DISTRIBUTION DIAGRAM	EMERSON DRAWING NO.: 3258585-PSS-PASH-DWG-00010	SHEET NO: 038
			UNITS: mm (inch) / © 2018	PROJECT TITLE: DCS SERANG PROJECT		CUSTOMER DRAWING NO.: –	REV.: 0

THIS DRAWING IS THE PROPERTY OF EMERSON PROCESS MANAGEMENT. INFORMATION AND KNOW HOW HEREIN ARE CONFIDENTIAL AND MAY NOT BE USED, REPRODUCED OR REVEALED TO OTHERS EXCEPT IN ACCORDANCE WITH CONTRACT OR OTHER WRITTEN CONSENT OF EMERSON PROCESS MANAGEMENT. ANY PERMITTED REPRODUCTION IN WHOLE OR IN PART, INCLUDING SHOP DRAWINGS MUST BEAR OR REFER TO THIS LEGEND.